# MicroGrids mixtes AC/DC pour l'intégration d'énergies renouvelables, bâtiments intelligents et mobilité électrique

*Gilney DAMM, Institut de Recherche Efficacity / Laboratoire IBISC, Université d’Evry*

**Résumé:** Les réseaux électriques sont en cours de migration entre un système complétement prévisible et pilotable basé sur les énergies fossiles, vers une nouvelle réalité basée sur des énergies renouvelables intermittentes et non-pilotables. Au même temps, il est attendu une forte consommation d’énergie électrique avec l’arrivé du véhicule électrique. Les réseaux électriques actuels ne sont pas prêts pour ces changements, mais de nouveaux éléments de l’automatique, de l’informatique, des télécommunications et des systèmes embarqués en général, ont permis le développement des SmartGrids en réponse à cette nouvelle réalité.

Ces nouveaux SmartGrids permettent d’intégrer les transformations qui se passent dans les villes. En effet, la génération distribuée à partir de panneaux photovoltaïques, d’éoliennes urbaines et de la cogénération ont fait que les consommateurs deviennent des producteurs à certains moments. Ces nouvelles productions apparaissent en même temps que des nouvelles charges intermittentes et possiblement commandables, les véhicules électriques et les bâtiments intelligents, deviennent réelles. De ce fait, il est de plus en plus envisagé de piloter des morceaux partiellement ou complétement indépendants (des MicroGrids), de manière à contrer ces nouvelles problématiques. Ces nouveaux MicroGrids pourront être à courant alternatif (AC) ou continue (DC), car une grande partie des nouveaux éléments des SmartGrids, comme les véhicules électriques, les batteries, les supercapacitors et les piles à combustible, sont naturellement en courant continue. Du coup, ces réseaux se présentent comme des MicroGrids Mixtes AC/DC.

Plusieurs travaux de recherche sont menés en ce moment sur ces réseaux électriques AC/DC, autant en haute qu’en basse tension. Une grande partie d’entre eux en fortes collaborations industrielles, en particulier à travers les Instituts de la Transition Énergétique Efficacity et SuperGrid. Cette présentation ira apporter quelques-uns des résultats de ces collaborations, passés ou en cours.

# *Control of SmartGrids*

*GILNEY DAMM*

université
PARIS-SACLAY

# *Smart Energy needs advanced mathematic methods*

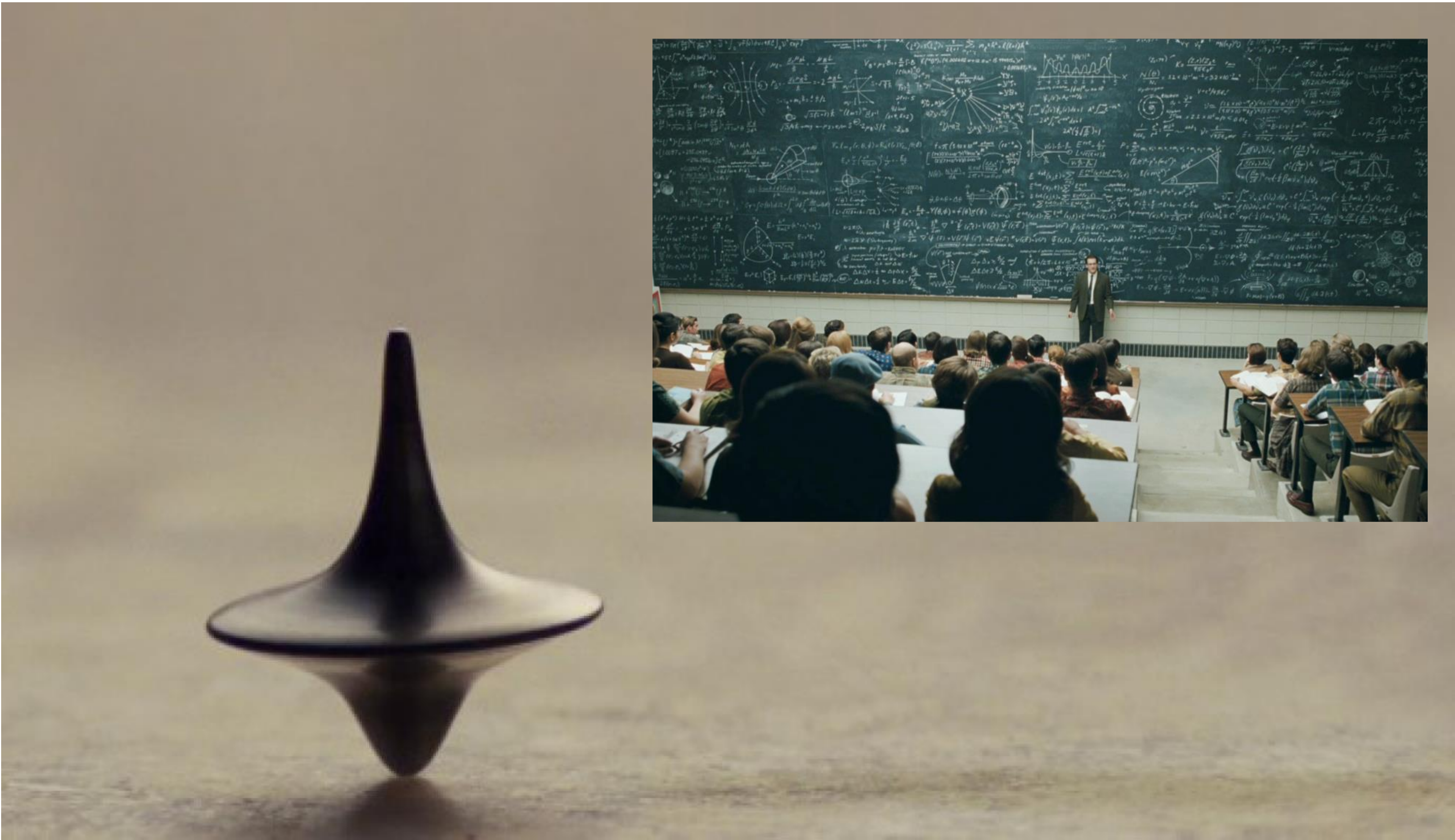

# *Electricity a Changing world…*

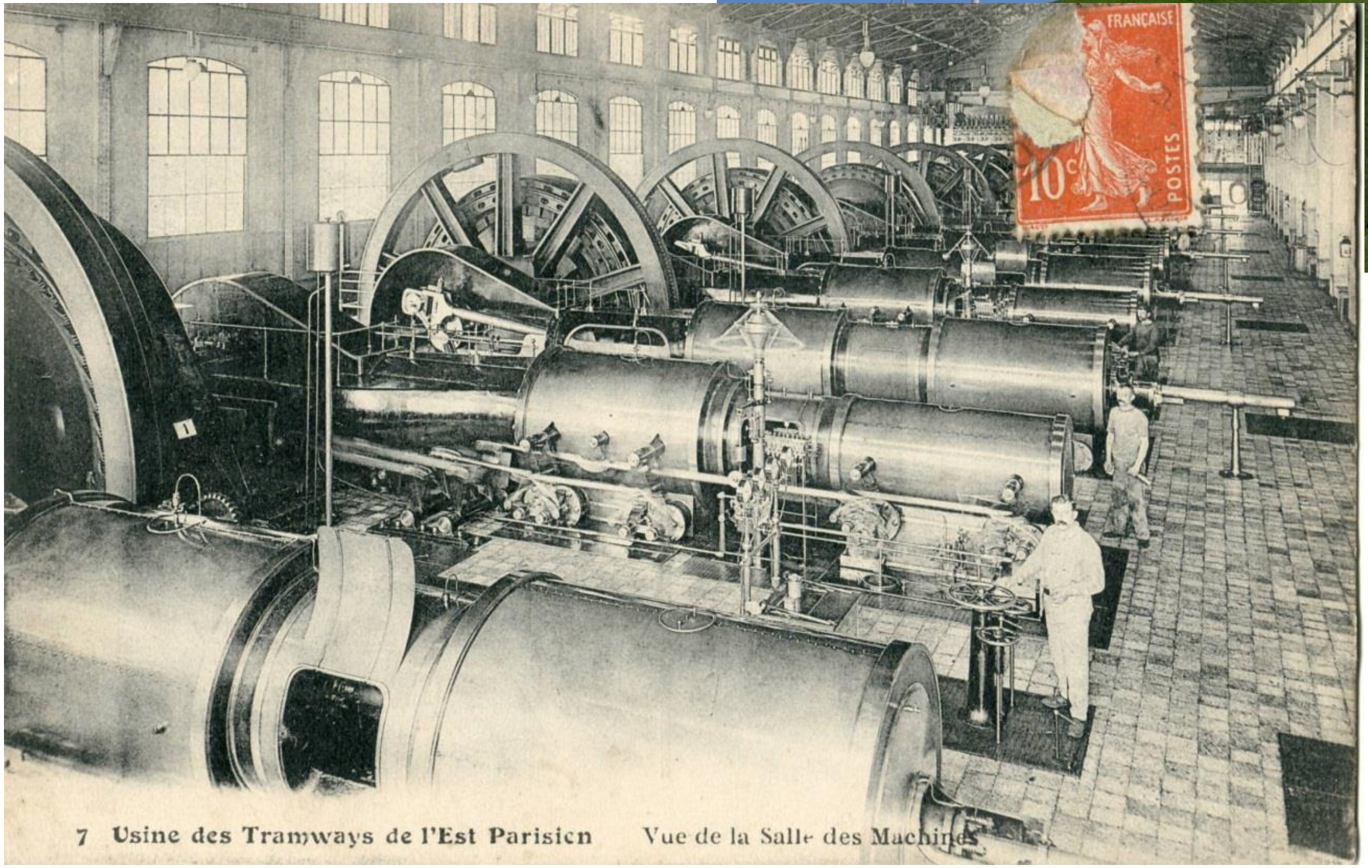

# Current architecture

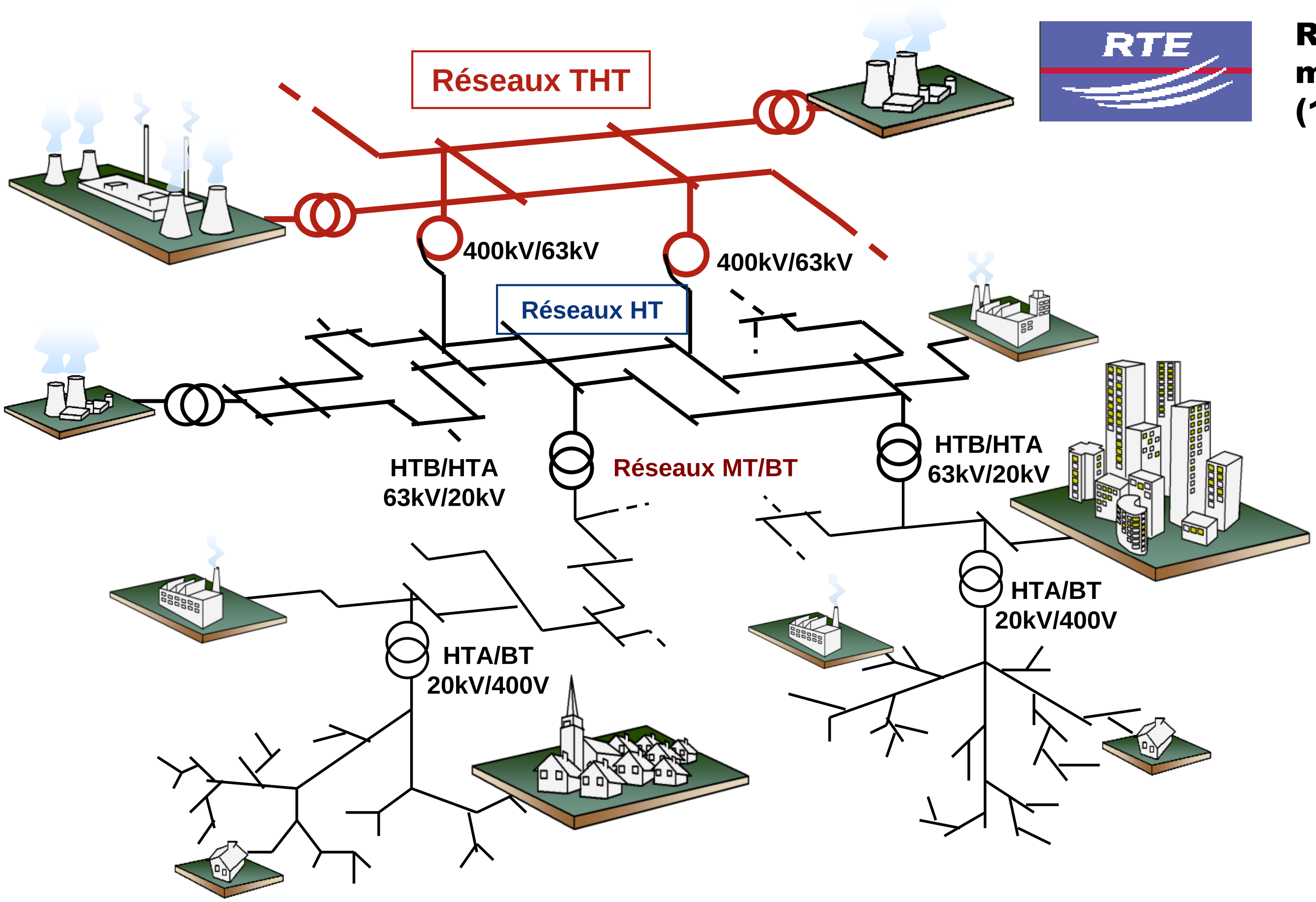

**Réseaux maillés ($10^5$km)**

**Réseaux arborescents ($1{,}25\ 10^6$km),**

**→ a top-down network**

Courtesy: EDF

# Towards a new grid…

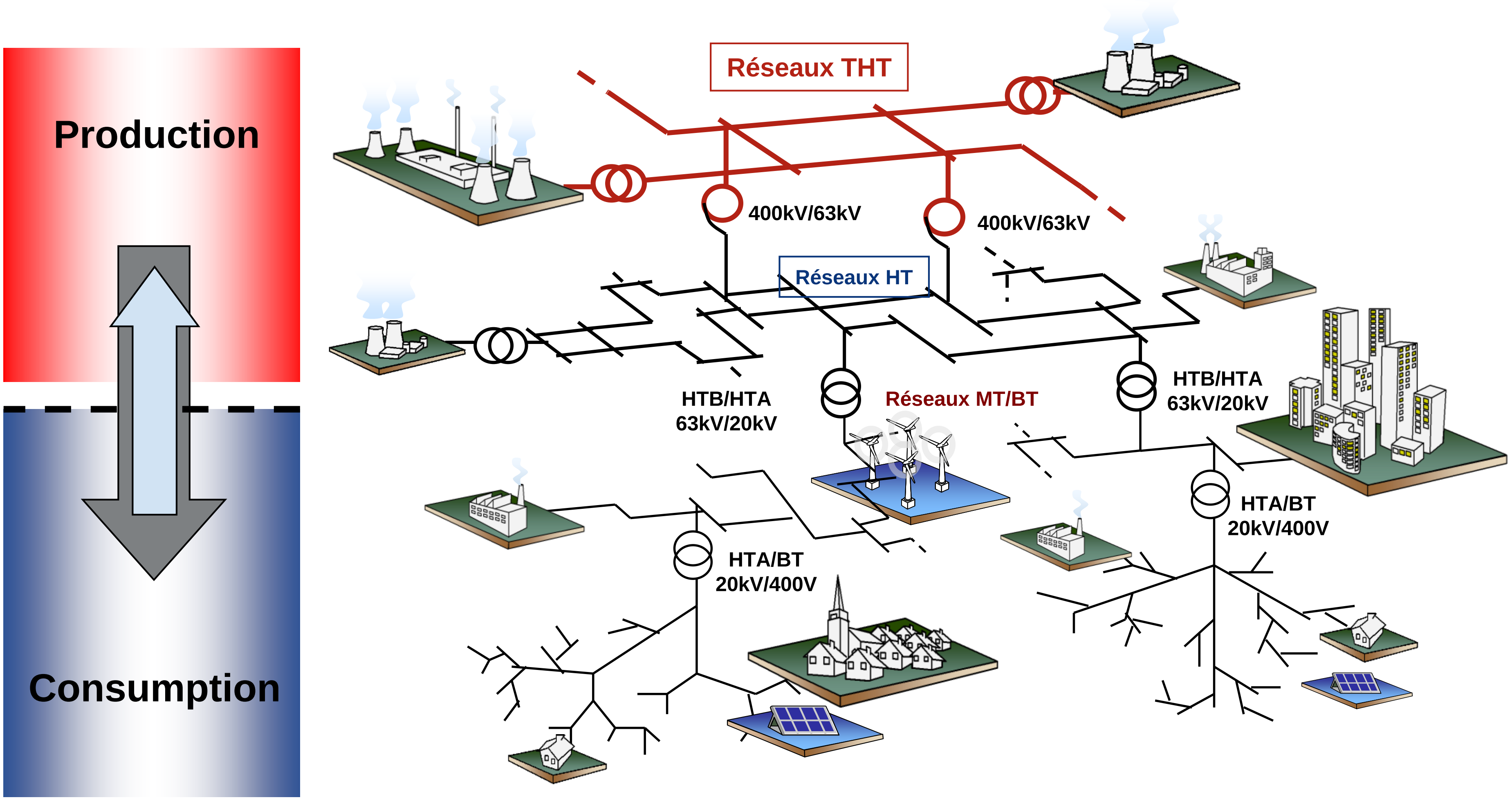

**→ A change of paradigm for the grid… and for the whole power system**

Courtesy: EDF

# *Basis*

One of the fundamental characteristics of power systems:

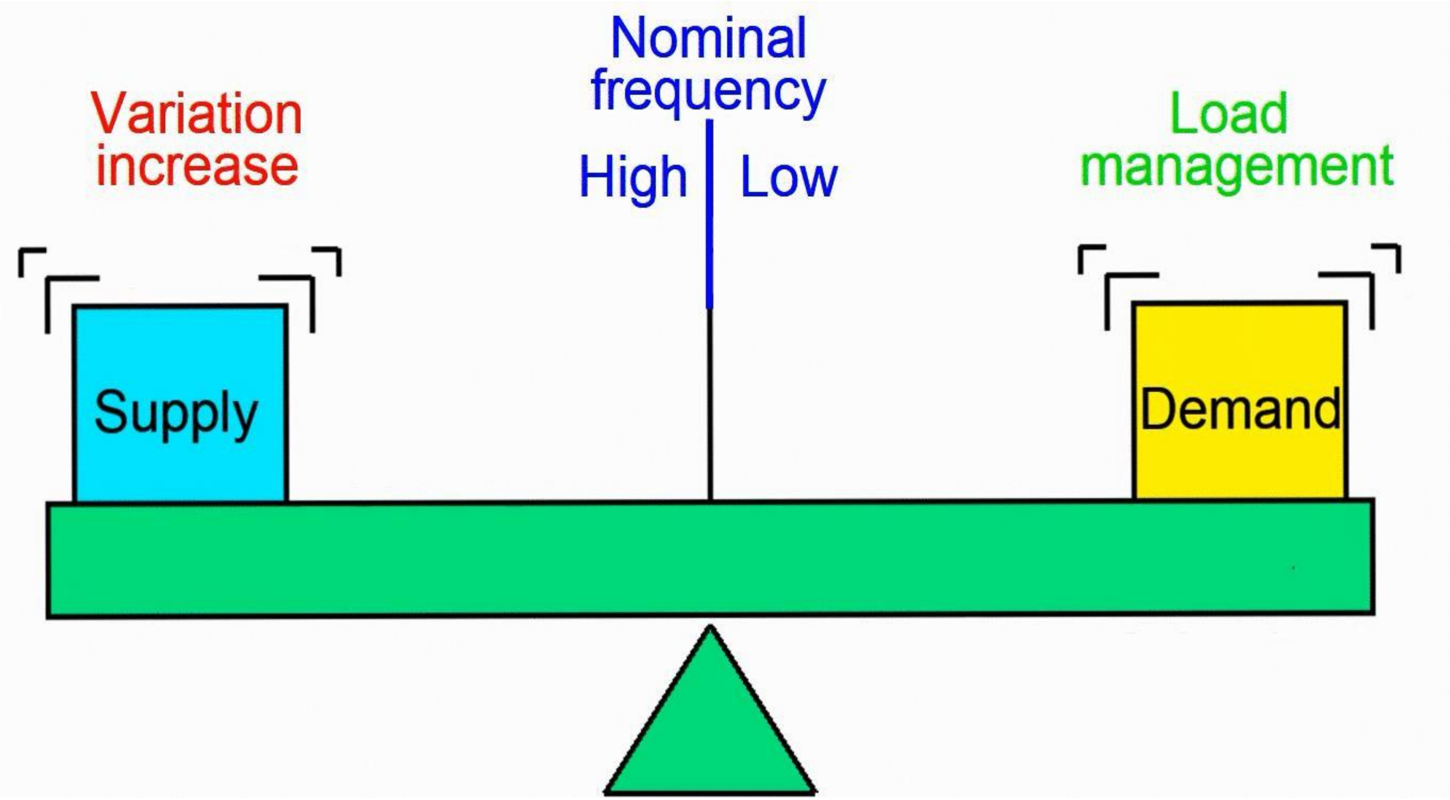

# *Power sources*

**Electricity production by source, EU-28, 2018**
(%)

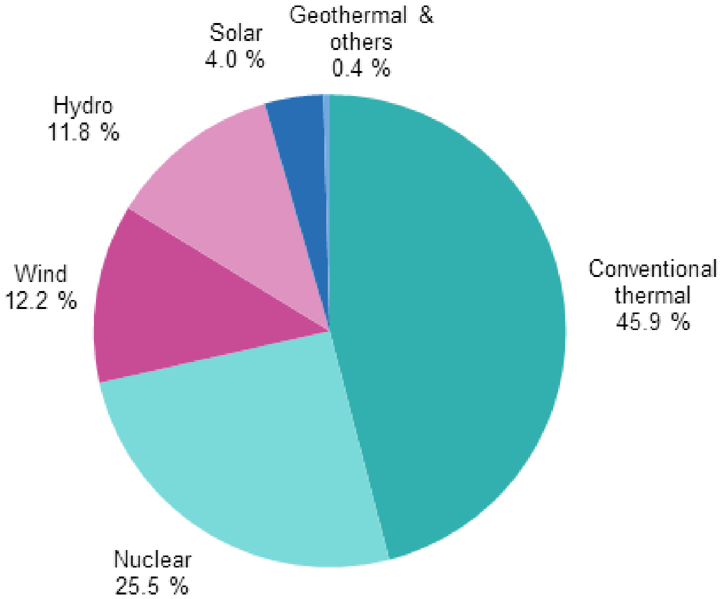

*Source:* Eurostat (online data code: nrg_105m)

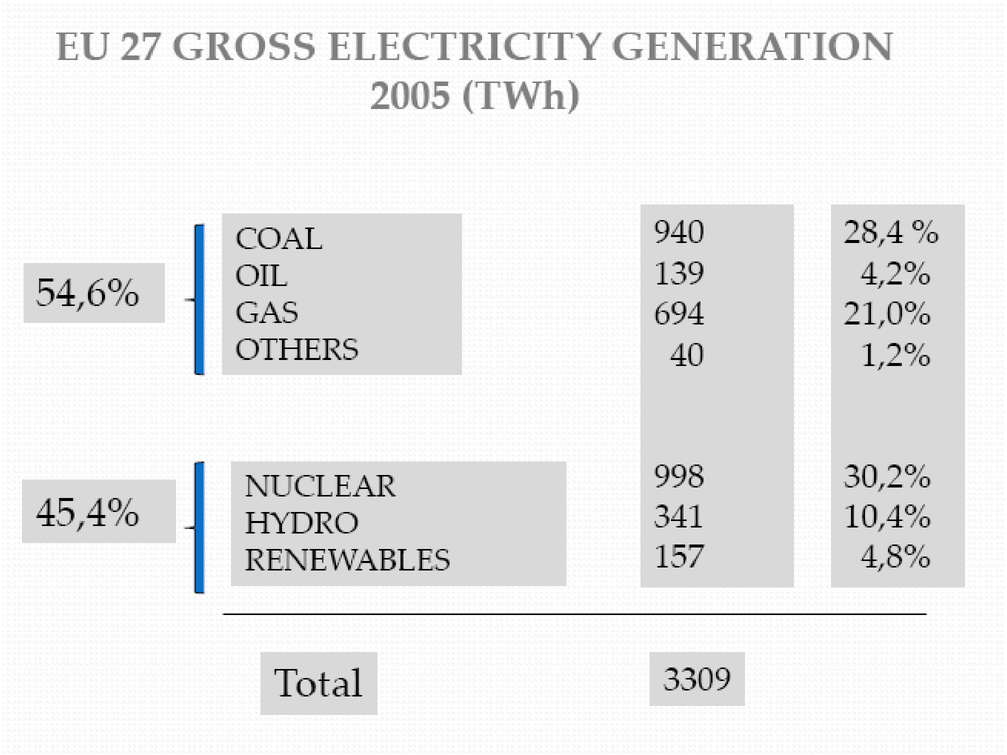

EU 27 GROSS ELECTRICITY GENERATION 2005 (TWh)

| | | | |
|---|---|---|---|
| 54,6% | COAL | 940 | 28,4 % |
| | OIL | 139 | 4,2% |
| | GAS | 694 | 21,0% |
| | OTHERS | 40 | 1,2% |
| 45,4% | NUCLEAR | 998 | 30,2% |
| | HYDRO | 341 | 10,4% |
| | RENEWABLES | 157 | 4,8% |
| | Total | 3309 | |

eurostat

# *Europe*

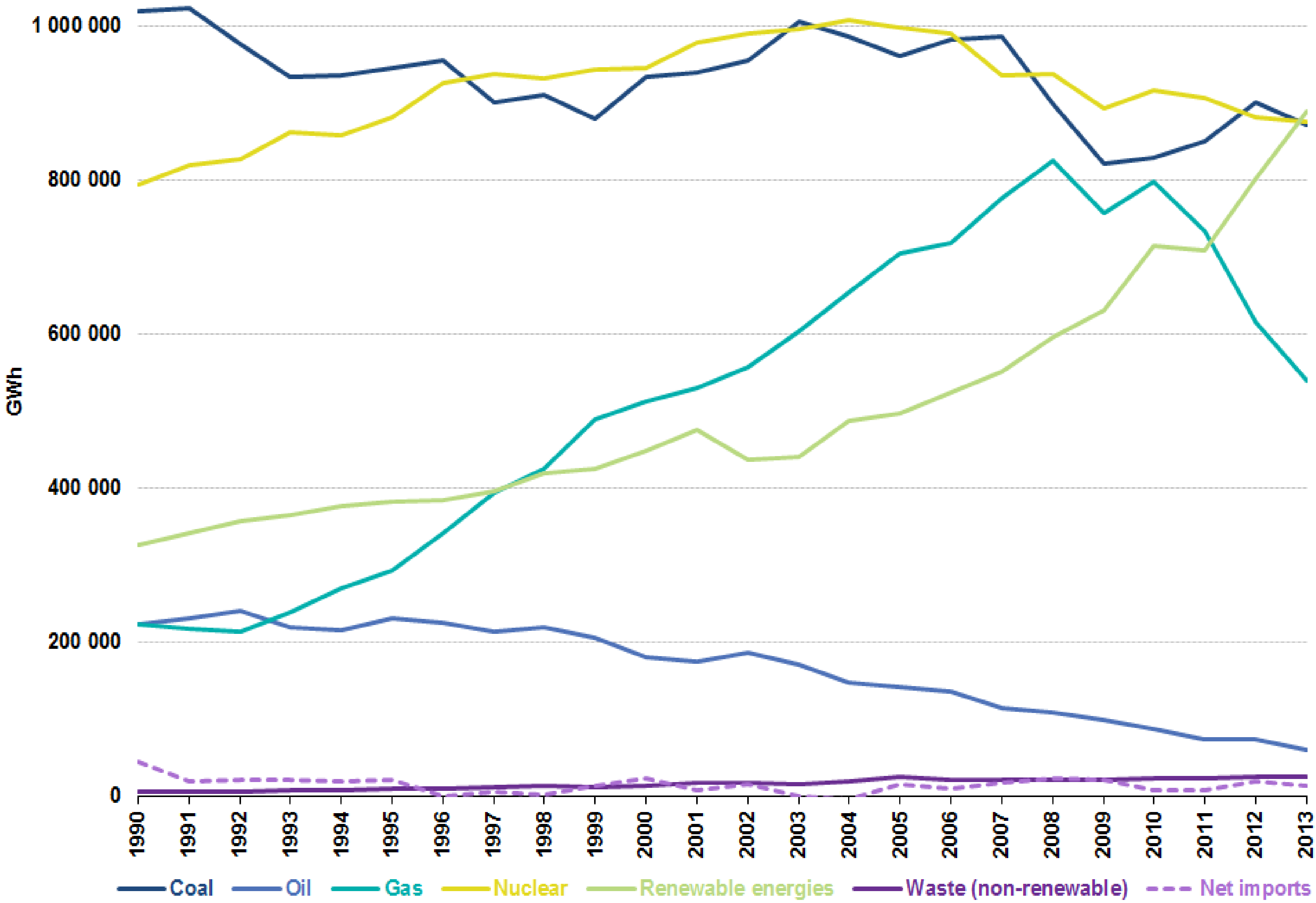

1 000 000
800 000
600 000
400 000
200 000
0
GWh
1990
1991
1992
1993
1994
1995
1996
1997
1998
1999
2000
2001
2002
2003
2004
2005
2006
2007
2008
2009
2010
2011
2012
2013
Coal
Oil
Gas
Nuclear
Renewable energies
Waste (non-renewable)
Net imports

# *Intermitence - Solar Power*

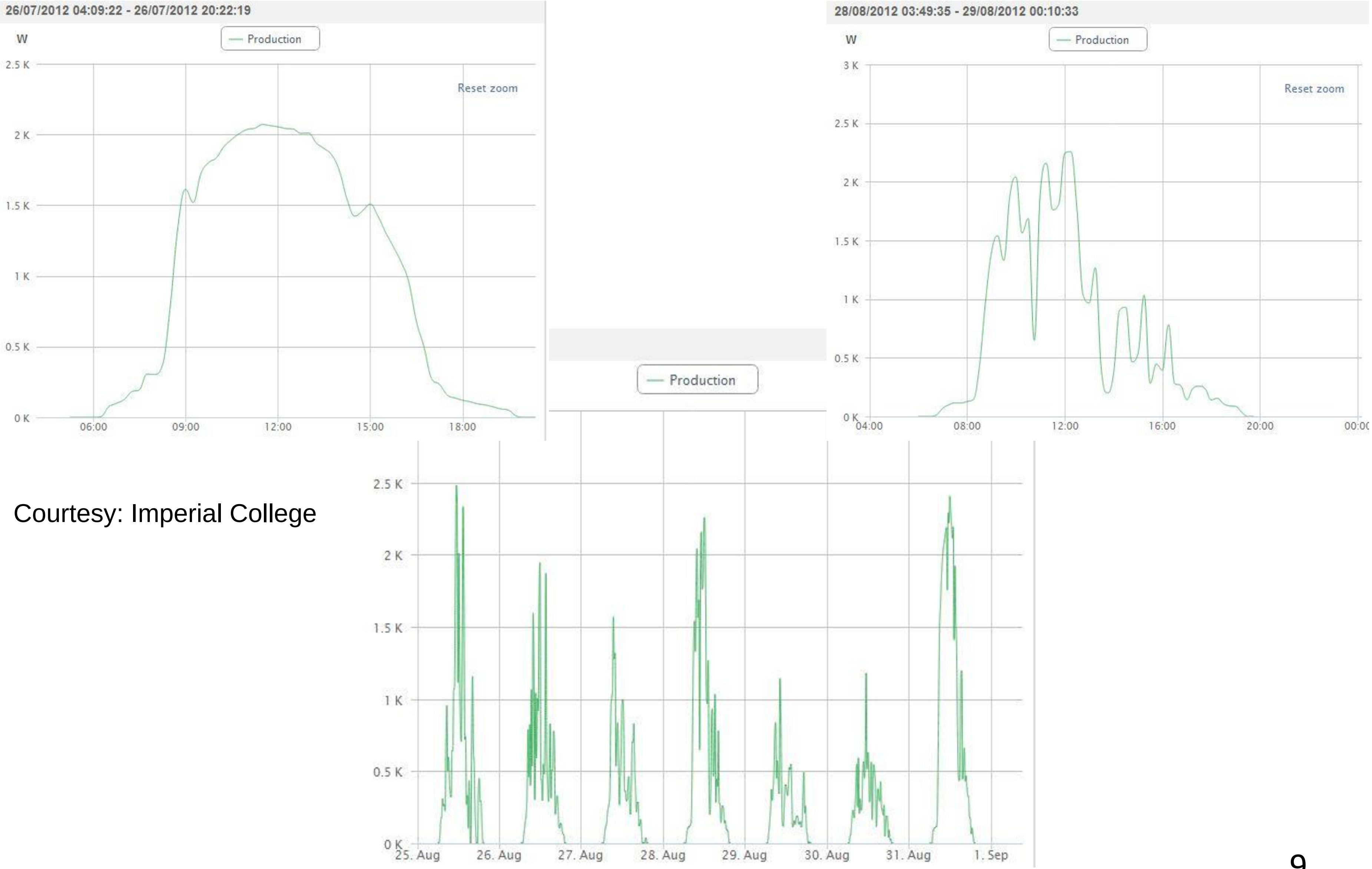
26/07/2012 04:09:22 - 26/07/2012 20:22:19

28/08/2012 03:49:35 - 29/08/2012 00:10:33

Courtesy: Imperial College

# Changing in-feed patterns challenge existing grid infrastructures

Week burden of a transformer station in the rural area the LEW-Verteilnetz GmbH – 2003 and today

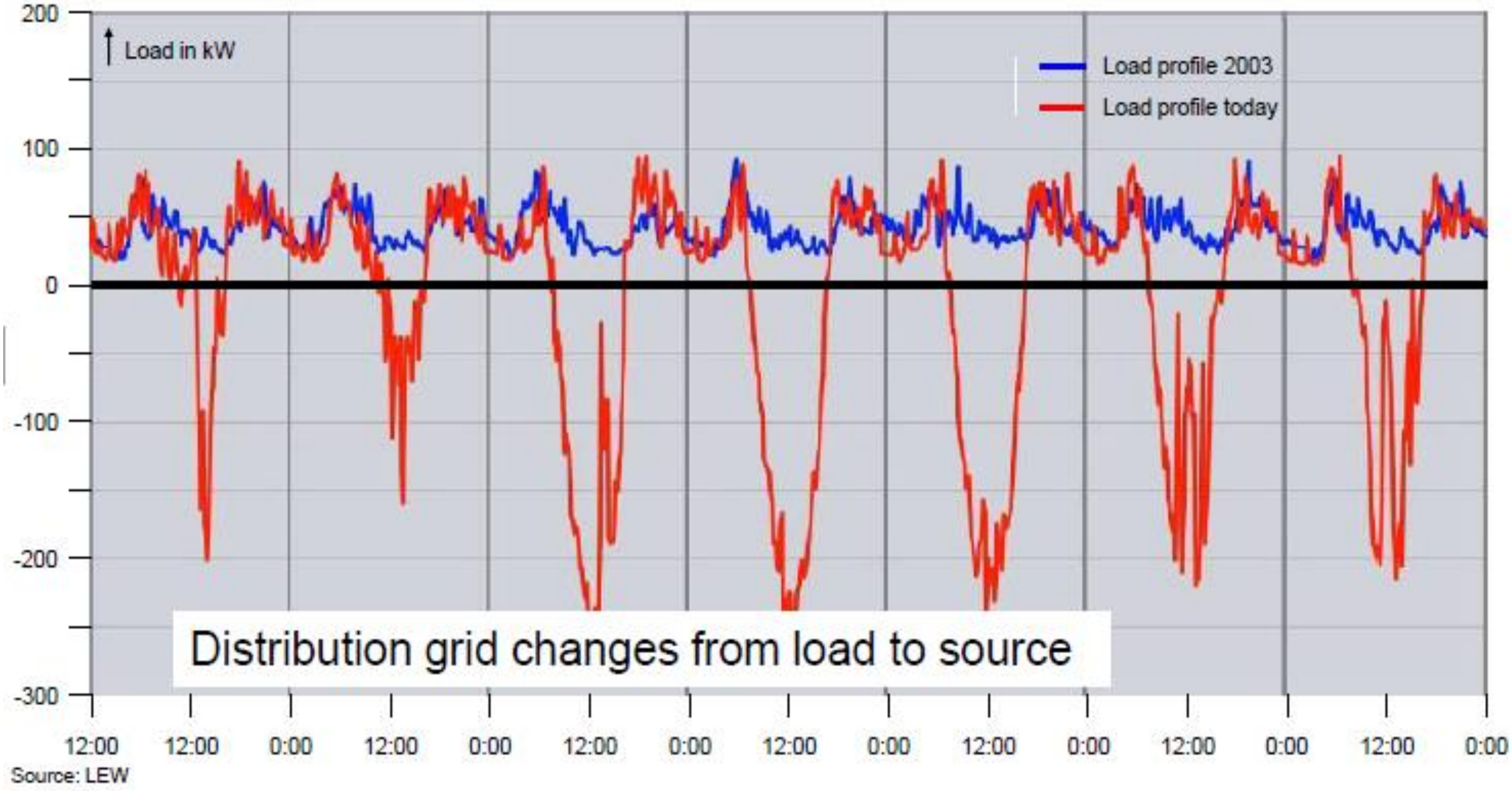

Source: LEW

Courtesy: Siemens

# *Loads - Electrical cars*

Courtesy: Siemens

theguardian

### UK unprepared for surge in electric car use, think tank warns

Green Alliance says simultaneous charging could potentially damage electronic equipment unless action is taken by 2020

This impact could include damage to power networks from electric car charging or solar unable to connect to the grid because of bottlenecks. That in turn could trigger “emergency policymaking”, which Benton said would be bad for investment.

In France in 2018, around 200.000 electric vehicles existed in France, then 0,5% in a total of around 40 millions vehicles

It is estimated by ADEME of around 4 millions electric vehicles in 2030

# Problems due to new types of generation and consumption: bottlenecks in the low voltage distribution grid

**Local voltage increase due to PV power infeed**

**Local voltage decrease due to EV charging**

*These visualizations are a result of E-Energy project MeRegio.*

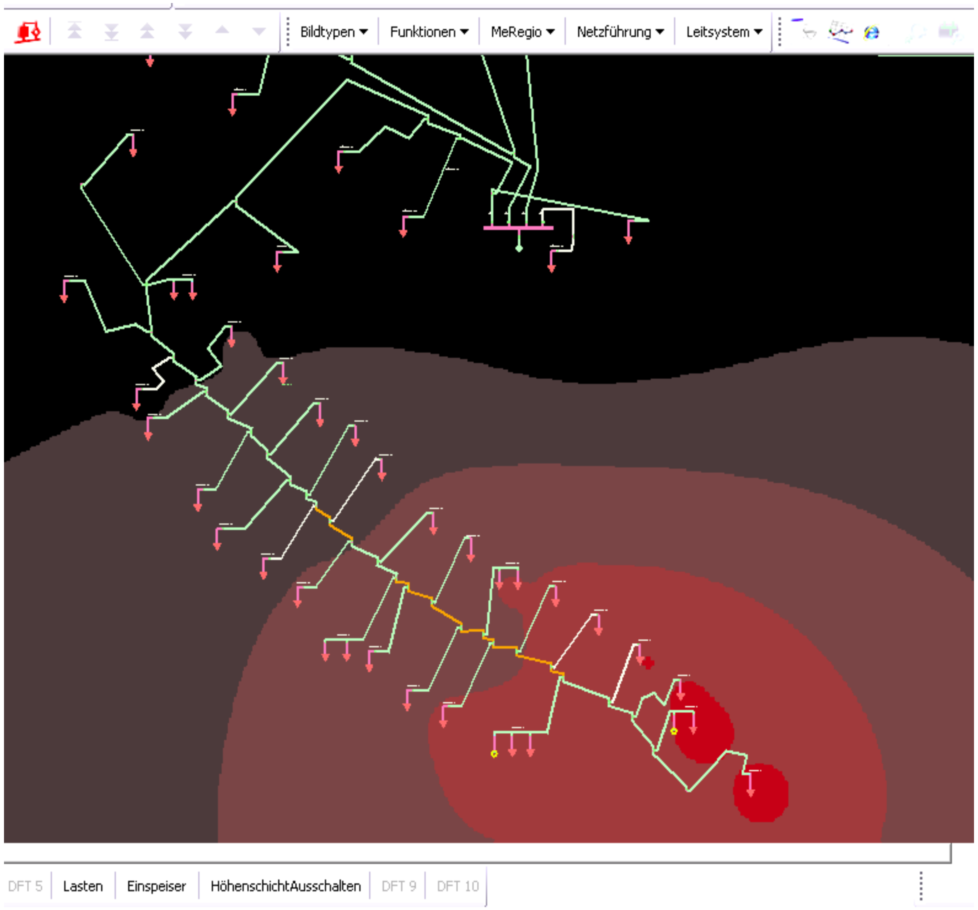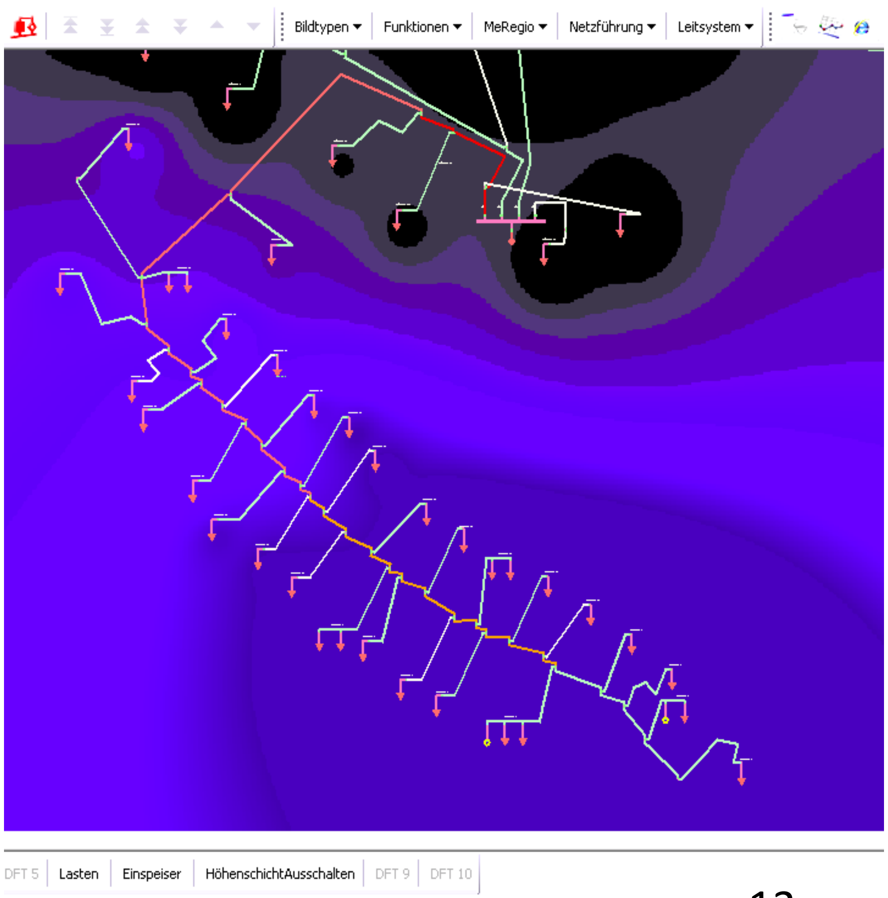

# EFFICACITY

Energy Transition Institute in urban territories

# Efficacity consortium – 130 researchers

- 6 industrial leaders

EDF
dalkia GROUPE EDF
ENGIE
IBM
RATP
VINCI CONSTRUCTION FRANCE
VEOLIA
transdev

- 7 engineering companies

abmi
ARCADIS
assystem
EPF L'INGÉNIERIE CO-CRÉATIVE
suez
INGÉROP Inventons demain
setec

- 15 academic partners

ESTP L'ÉCOLE DES GRANDS PROJETS
CSTB le futur en construction
UPEC Connaissance-Action UNIVERSITÉ PARIS-EST CRÉTEIL VAL DE MARNE
UPEM UNIVERSITÉ PARIS-EST MARNE-LA-VALLÉE
UNIVERSITÉ PARIS-EST
École des Ponts ParisTech
ESIEE PARIS
IGN INSTITUT NATIONAL DE L'INFORMATION GÉOGRAPHIQUE ET FORESTIÈRE
IFSTTAR
EIVP ÉCOLE DES INGÉNIEURS DE LA VILLE DE PARIS ÉCOLE SUPÉRIEURE DU GÉNIE URBAIN
Éa v&t
MINES ParisTech
malaquais
paris-belleville école nationale supérieure d'architecture
Cerema

efficacity

# *Students Research Team for these results*

Filipe Perez

Sabah Siad

Alessio Iovine

# MicroGrids are becoming a key component for our Energy System

Typical MicroGrid consists of:

- ✓ **Intermittent generation**, focus in renewable sources (PV, Wind)
- ✓ **Variable loads**, (Heating, light, motors, electric vehicles)
- ✓ **Power converters** - DC/DC, DC/AC and AC/AC
- ✓ **Energy storage** with different time scales (battery, supercapacitor)
- ✓ **Grid connection** (synchronous generators, AC bus)

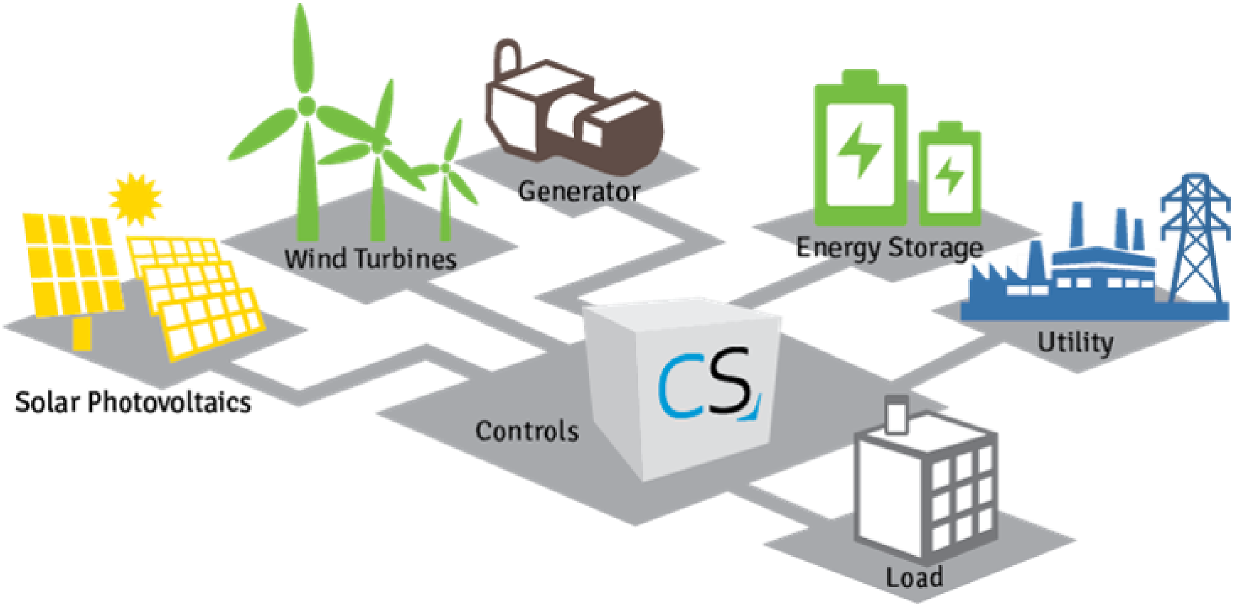

Courtesy: Siemens

# Smart Station

**Integration of all local energy sources**

**Connect the station to its neighborhood**

**Optimize energy fluxes**

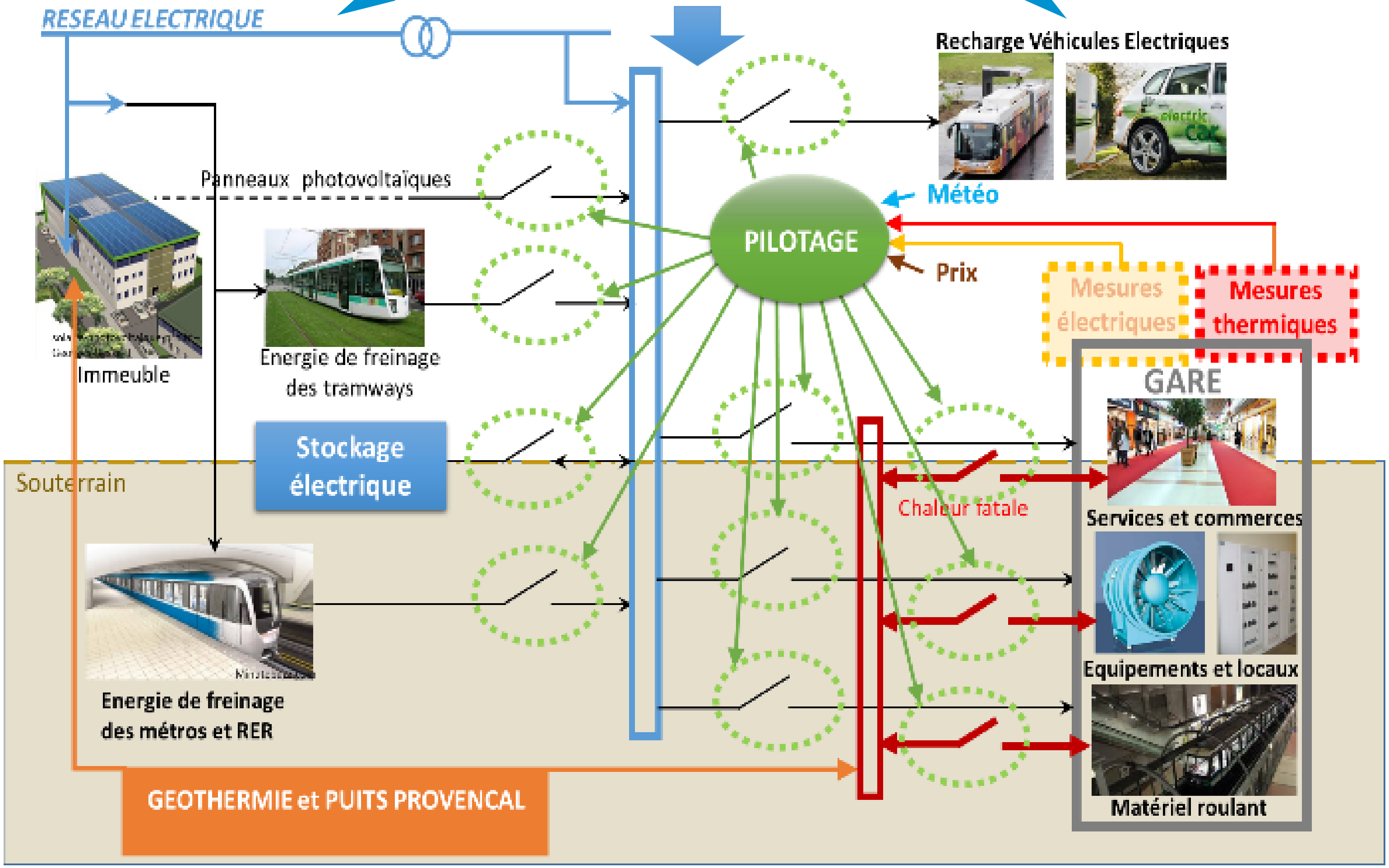

## Rail Stations

# Braking energy from subways, tramways and trains

# Braking energy for one line of subway

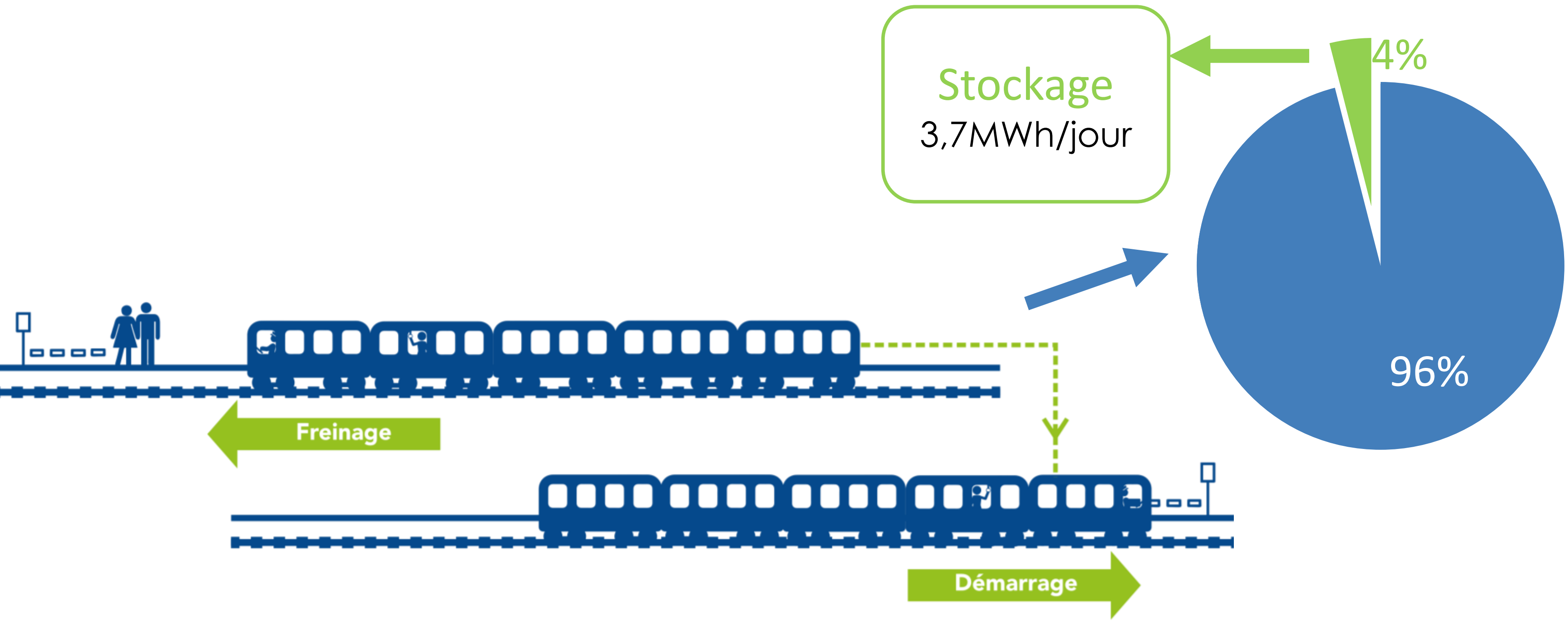

Stockage

3,7MWh/jour

# Modeling and Control for MicroGrids

## Braking energy absorption in the MicroGrid

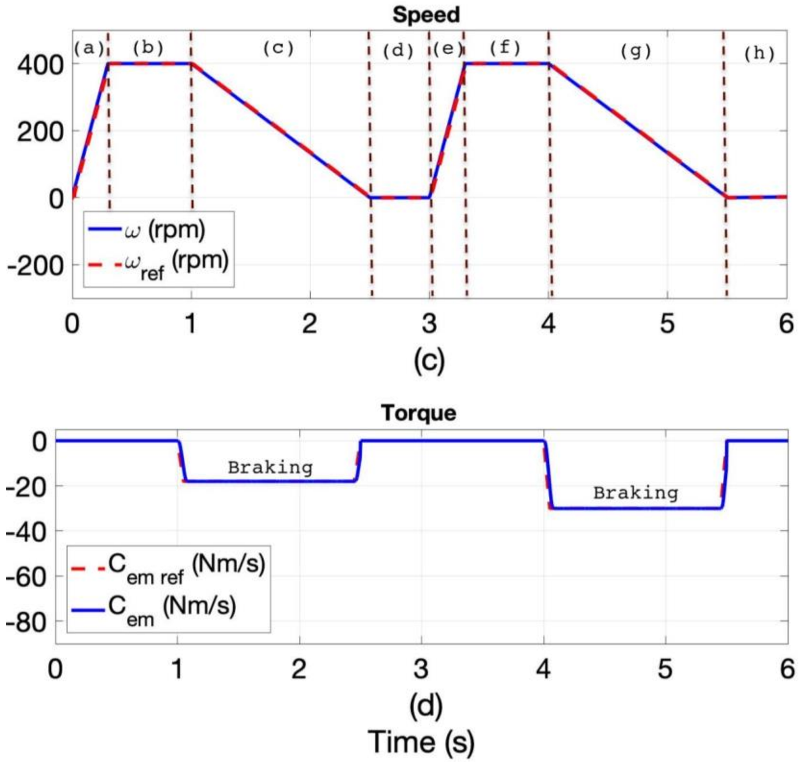

# Modeling and Control for MicroGrids

## Hybrid AC/DC MicroGrid for station's neighborhood…..

- **MicroGrid DC**
  - Integration of distributed generation, electric vehicles and storage
- **Distributed Control of DC MicroGrid**
  - MicroGrid DC – hybrid/hierarchical control with constrained communications
- **Ancillary services for AC grid**
  - Voltage stabilization
  - Frequency response
  - Synthetic inertia – synchronverters, Fast Frequency Response
- **Smart substation**
  - Power flux management, Virtual Power Plant

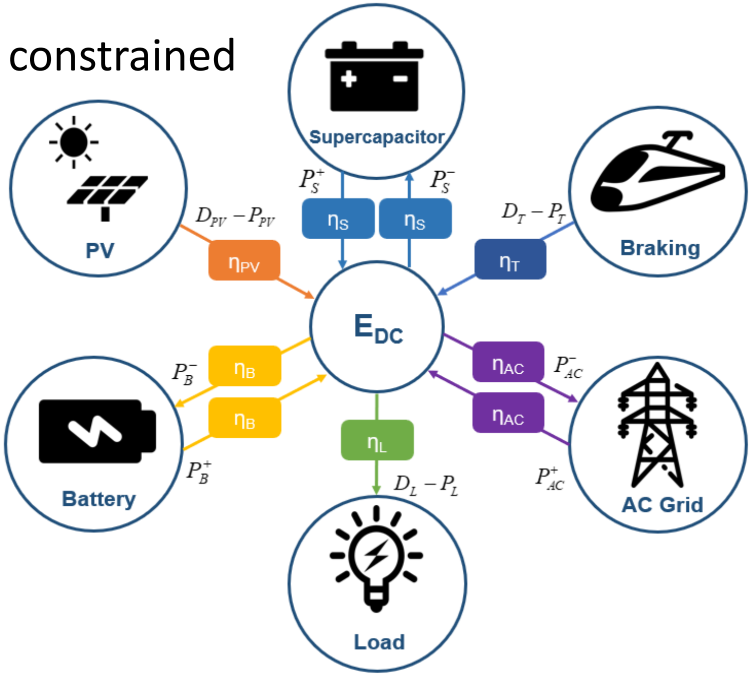

# Mixed AC/DC MicroGrid

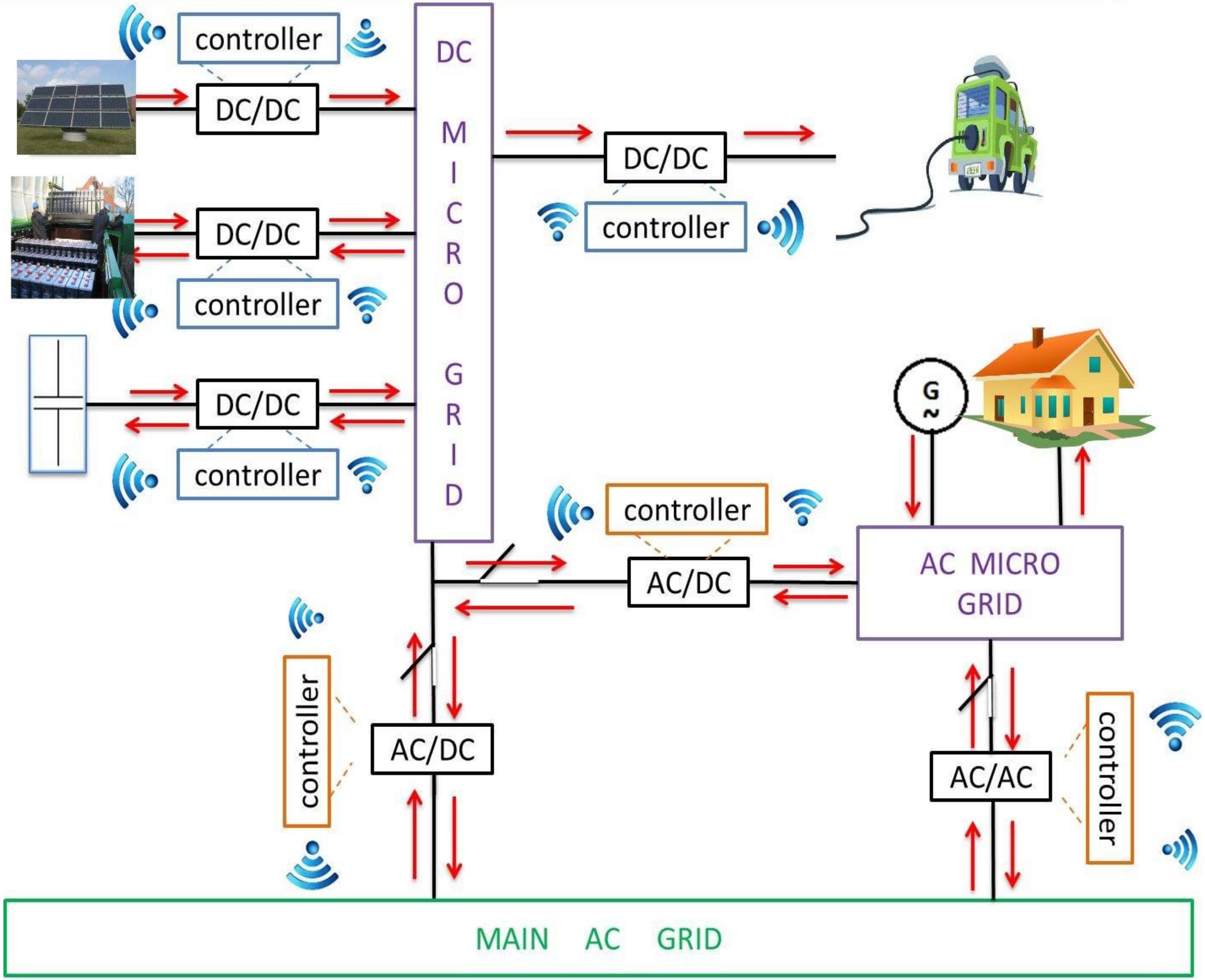

# Mixed AC/DC MicroGrid

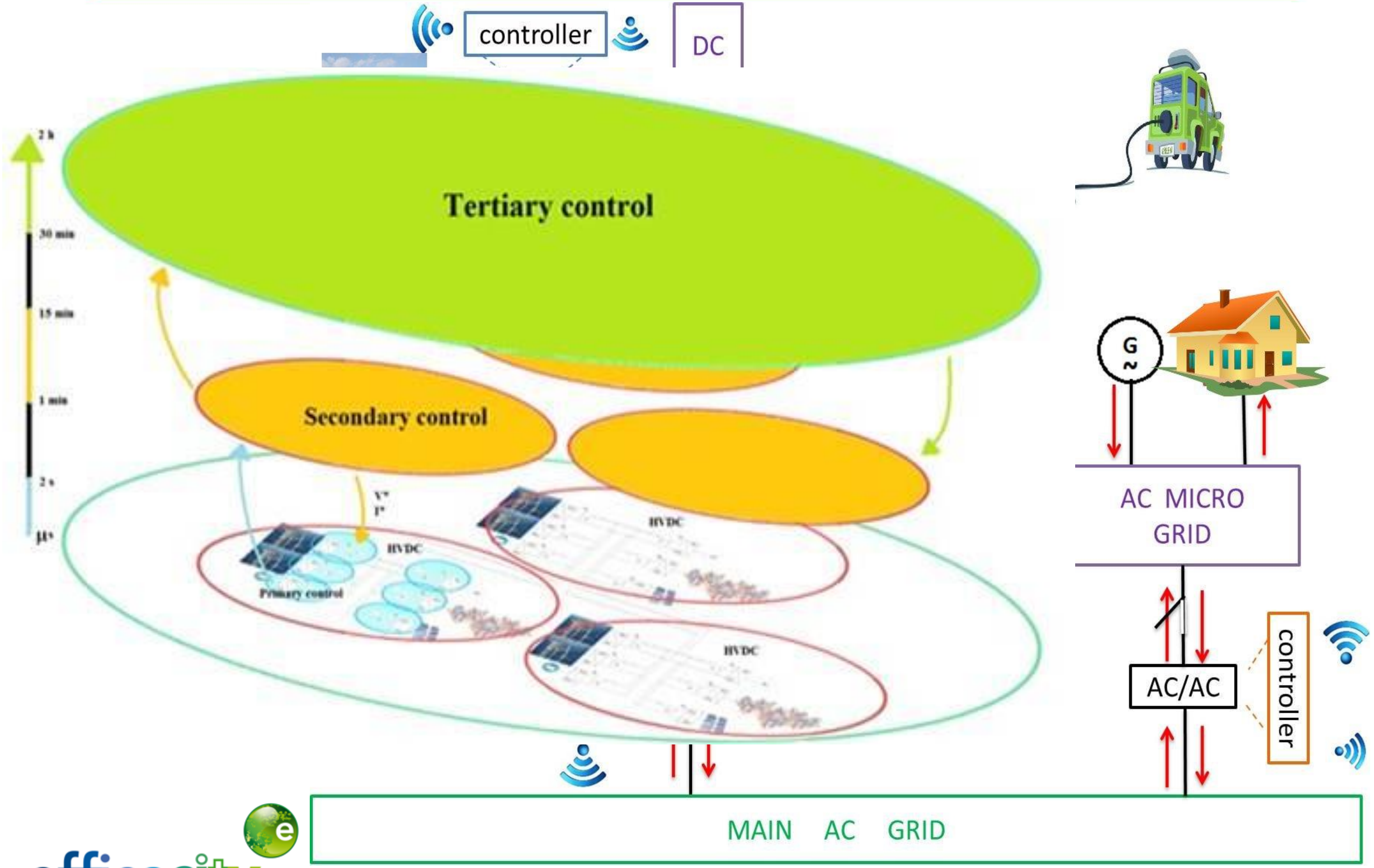

# *Control Scheme for a MicroGrid*

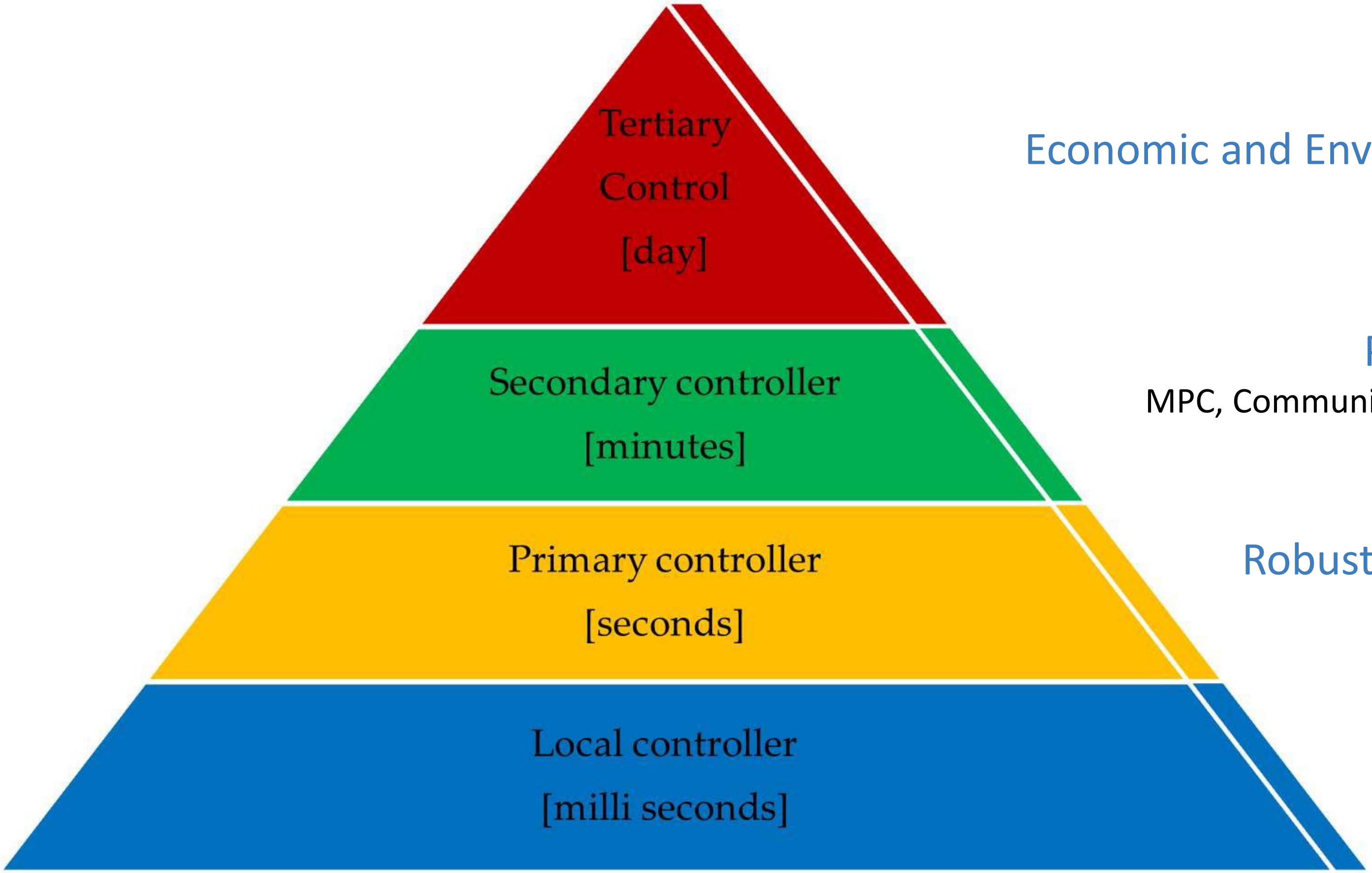

Economic and Environmental Optimization
MPC, Optimization, AI

Power Flux Management
MPC, Communication Constrained, Distributed

Robust Stabilization of Voltages
Robust, distributed

Local control of physical devices
non-linear

# *Hierarchical and/or Hybrid control*

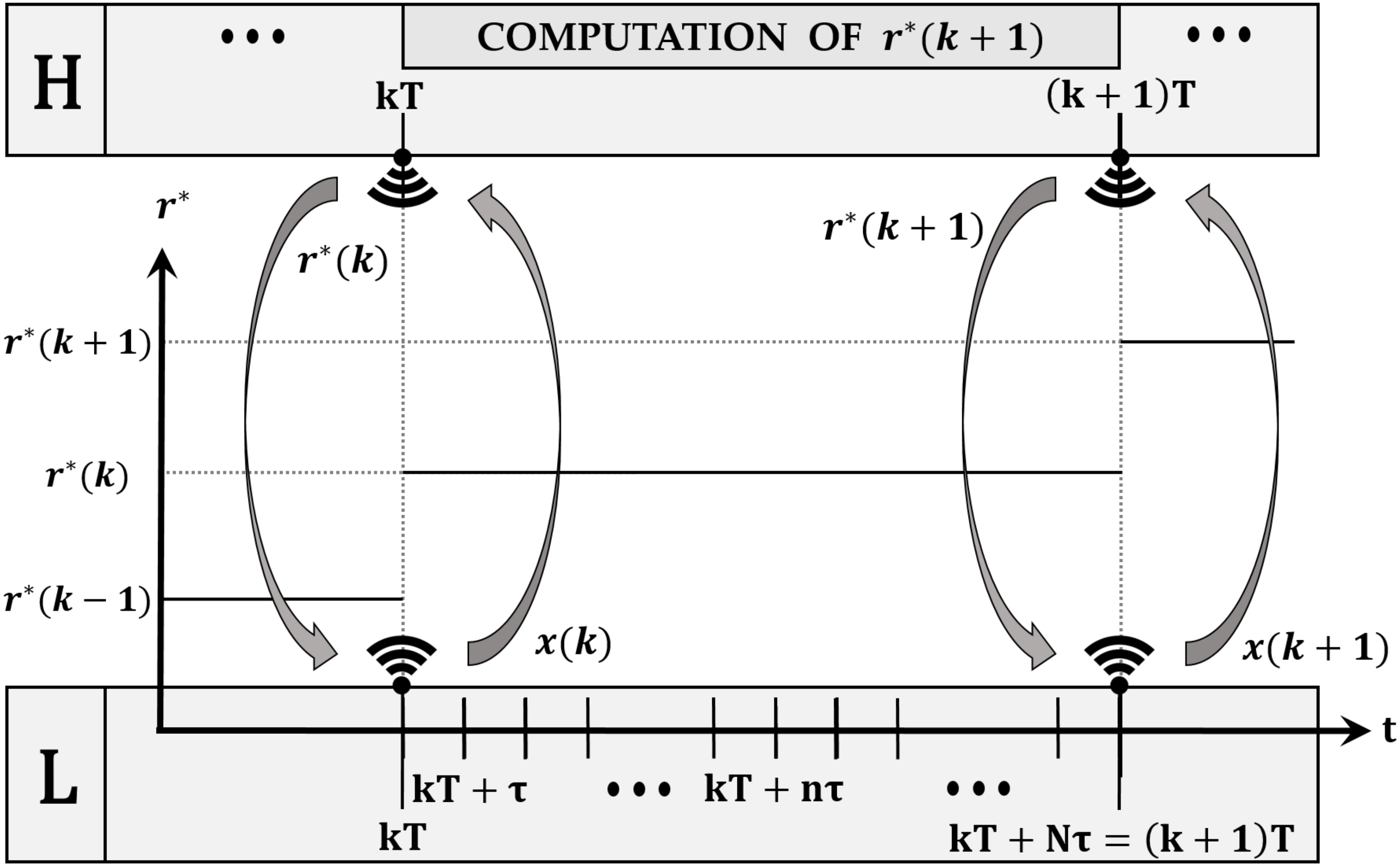

# *DC MicroGrid: Model*

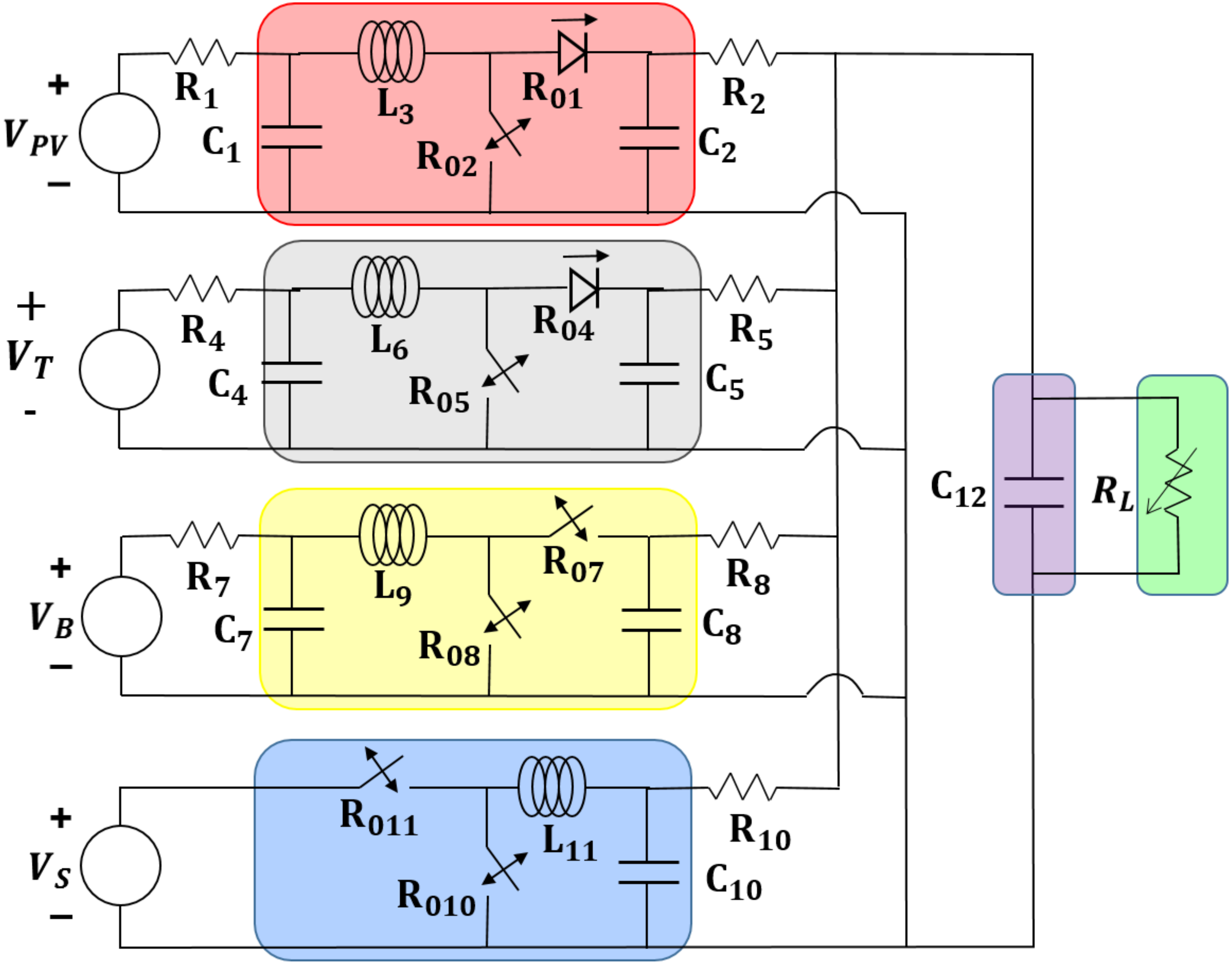

# Secondary

$$\begin{cases} E_{DC}(k+1) = E_{DC}(k) \\ \qquad\qquad +T\left[\eta_{PV}(D_{PV}(k) - P_{PV}(k)) - \frac{1}{\eta_L}(D_L(k) - P_L(k))\right] \\ \qquad\qquad +T\left[\eta_B^d P_B^+(k) - \frac{1}{\eta_B^c} P_B^-(k) + \eta_S^d P_S^+(k) - \frac{1}{\eta_S^c} P_S^-(k)\right] \\ E_B(k+1) = E_B(k) + T\left[-P_B^+(k) + P_B^-(k)\right] \\ E_S(k+1) = (1 - T\alpha_S)E_S(k) + T\left[-P_S^+(k) + P_S^-(k)\right] \end{cases}$$

$$\|P_B^+(k+1) - P_B^+(k)\| \le \Delta\overline{P}_B^+, \ \forall\, k$$

$$\|P_B^-(k+1) - P_B^-(k)\| \le \Delta\overline{P}_B^-, \ \forall\, k$$

$$0 \le P_B^+(k) \le \overline{P}_B^+, \ \forall\, k$$

$$0 \le P_B^-(k) \le \overline{P}_B^-, \ \forall\, k$$

$$0 \le P_S^+(k) \le \overline{P}_S^+, \ \forall\, k$$

$$0 \le P_S^-(k) \le \overline{P}_S^-, \ \forall\, k$$

$$\min_{u(\cdot)} \quad \frac{1}{2}\left[\tilde{x}(k+\mathcal{N})^T P \tilde{x}(k+\mathcal{N}) + \sum_{i=k}^{k+\mathcal{N}-1} \tilde{x}(i)^T Q \tilde{x}(i) + u(i)^T R u(i)\right]$$

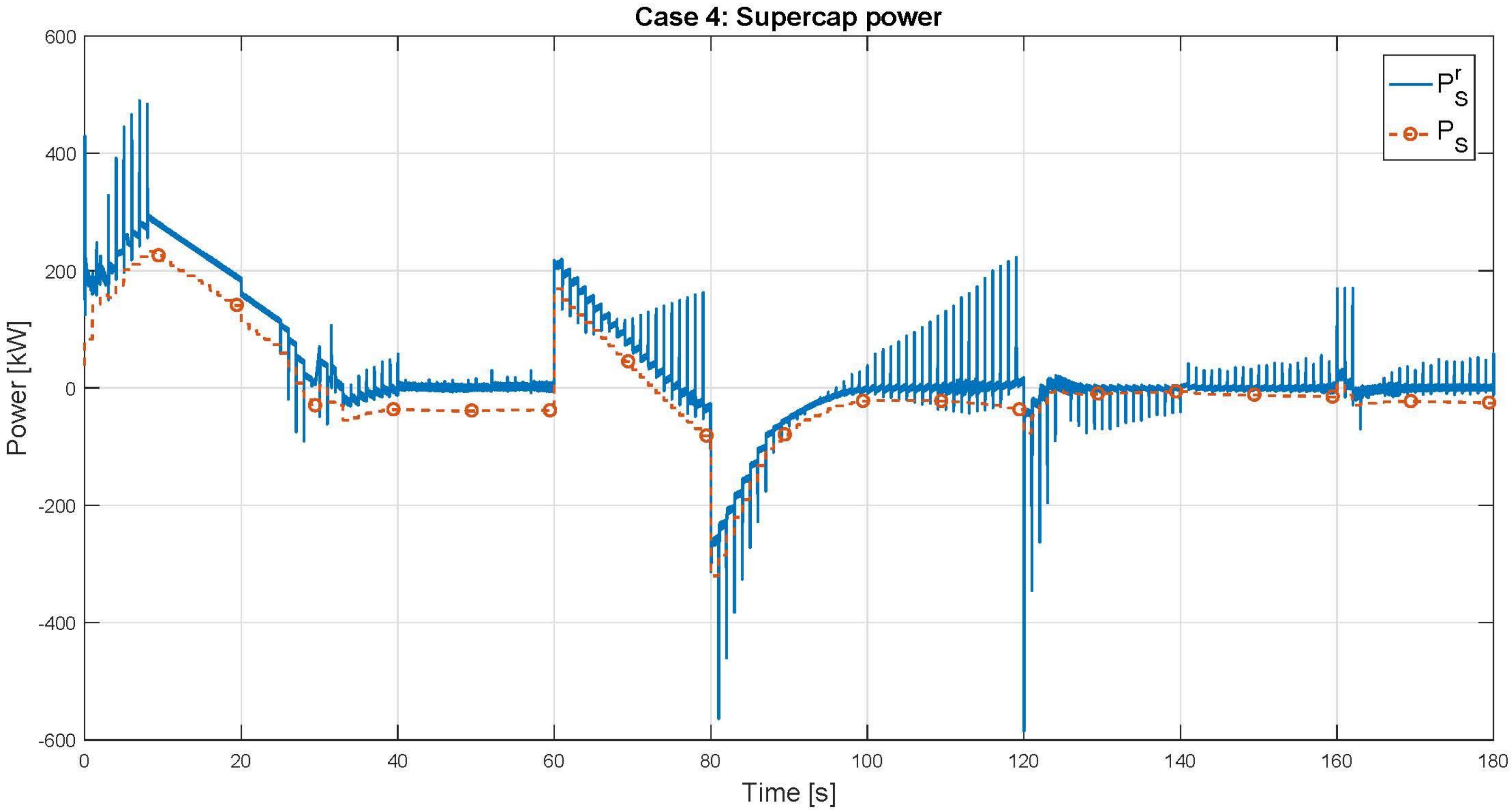
Case 4: Supercap power
Power [kW]
600
400
200
0
-200
-400
-600
0
20
40
60
80
100
120
140
160
180
Time [s]
$P_S^r$
$P_S$

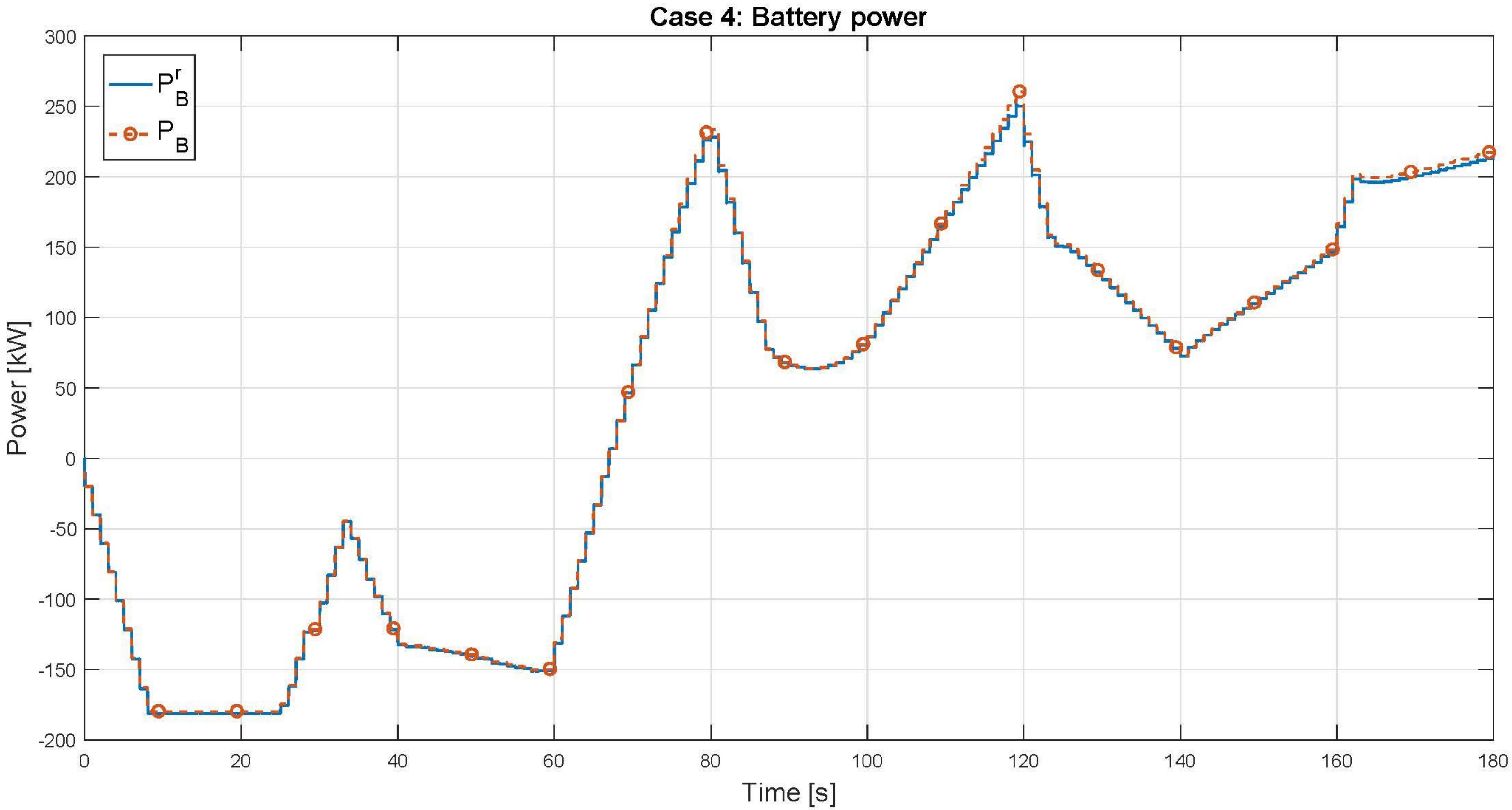
Case 4: Battery power
Power [kW]
300
250
200
150
100
50
0
-50
-100
-150
-200
0
20
40
60
80
100
120
140
160
180
Time [s]
$P_B^r$
$P_B$

# *DC MicroGrid - Low level controller*

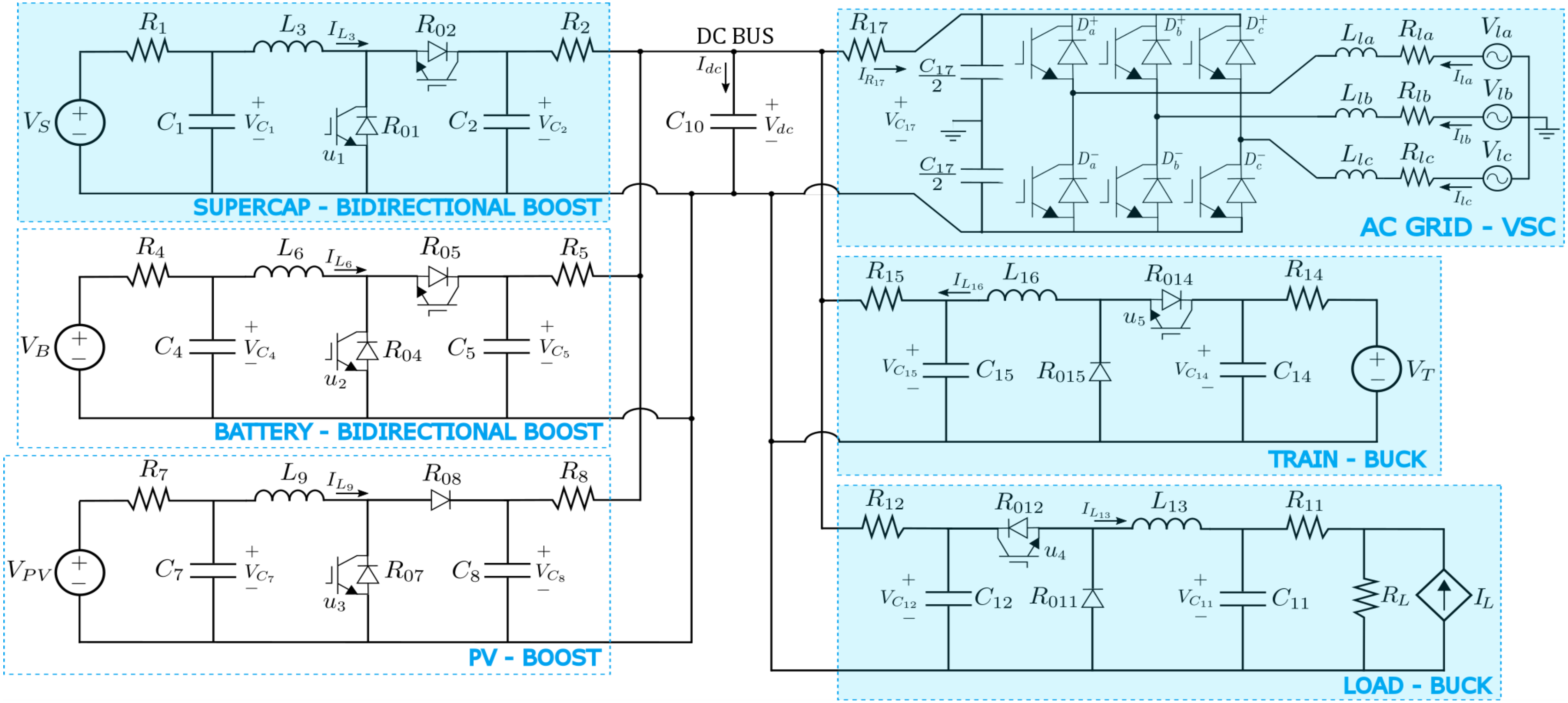

- ✓ Supercapacitor provides voltage stability
- ✓ Battery regulates the power flow (high level control)
- ✓ PV works in the maximum power point (MPPT)
- ✓ Load must be correctly supplied

- ✓ Current industrial controllers are nested PIs.
- ✓ Not sufficient for time varying loads and productions.
- ✓ DC bus voltage goes out of limits defined as (±5%)

# Super Capacitor System

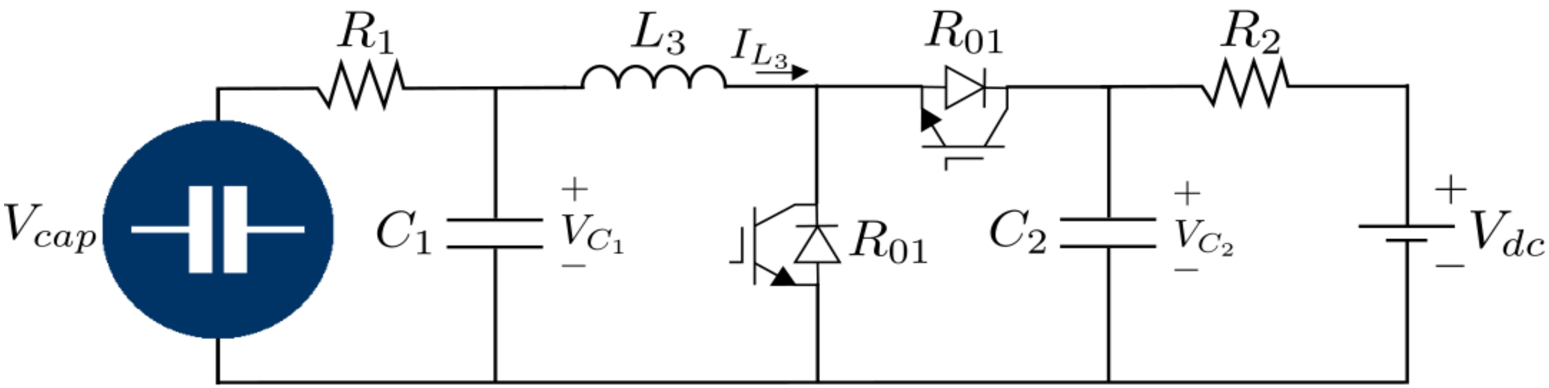

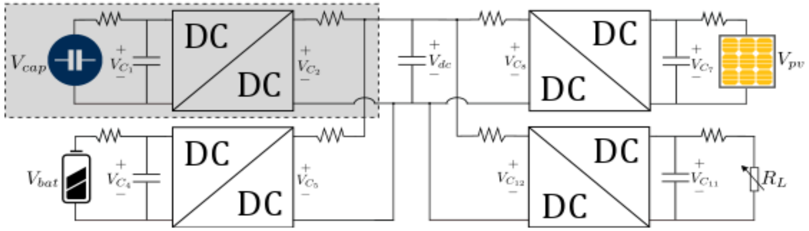

$$\begin{cases} \dot{V}_{C_1} = \dfrac{1}{R_1 C_1}(V_{cap} - V_{C_1}) - \dfrac{1}{C_1} I_{L_3} \\ \dot{V}_{C_2} = \dfrac{1}{R_2 C_2}(V_{dc} - V_{C_2}) + \dfrac{1}{C_2} I_{L_3}(1 - u_1) \\ \dot{i}_{L_3} = \dfrac{1}{L_3} V_{C_1} - \dfrac{1}{L_3} V_{C_2}(1 - u_1) - \dfrac{R_{01}}{L_3} I_{L_3} \end{cases}$$

# Battery System

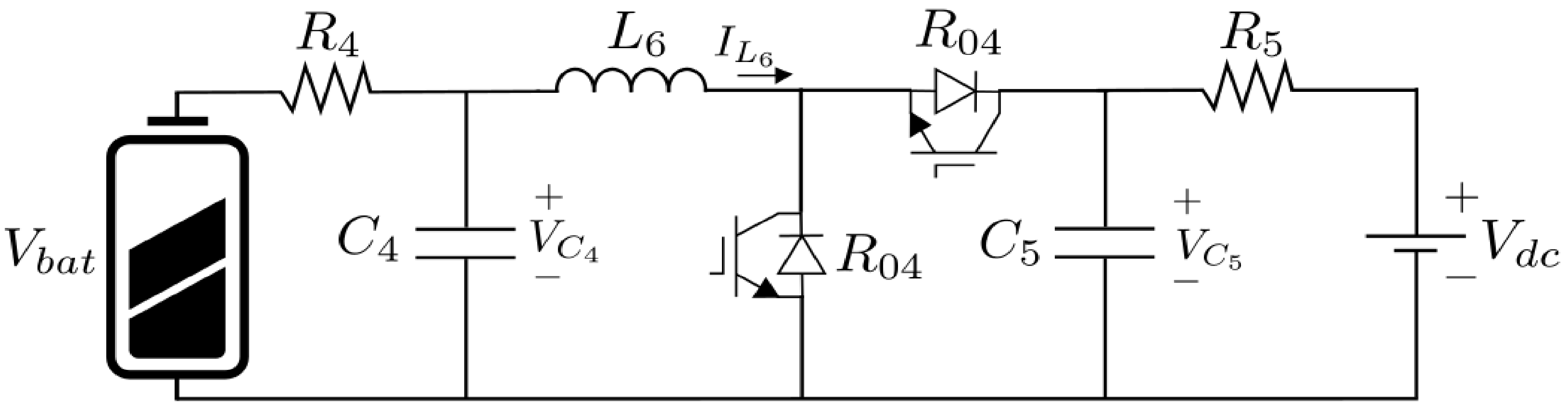

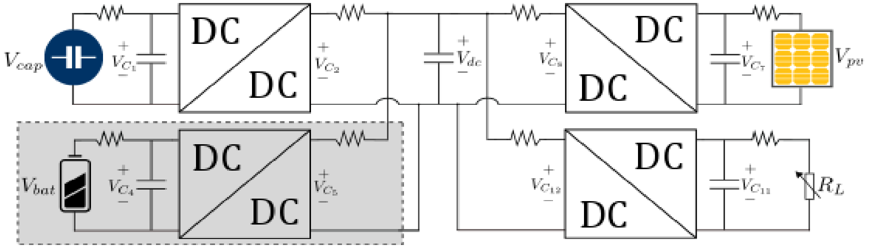

$$\begin{cases} \dot{V}_{C_4} = \dfrac{1}{R_4 C_4}(V_{bat} - V_{C_4}) - \dfrac{1}{C_4} I_{L_6} \\ \dot{V}_{C_5} = \dfrac{1}{R_5 C_5}(V_{dc} - V_{C_5}) + \dfrac{1}{C_5} I_{L_6}(1 - u_2) \\ \dot{I}_{L_6} = \dfrac{1}{L_6} V_{C_4} - \dfrac{1}{L_6} V_{C_5}(1 - u_2) - \dfrac{R_{04}}{L_6} I_{L_6} \end{cases}$$

# PV System

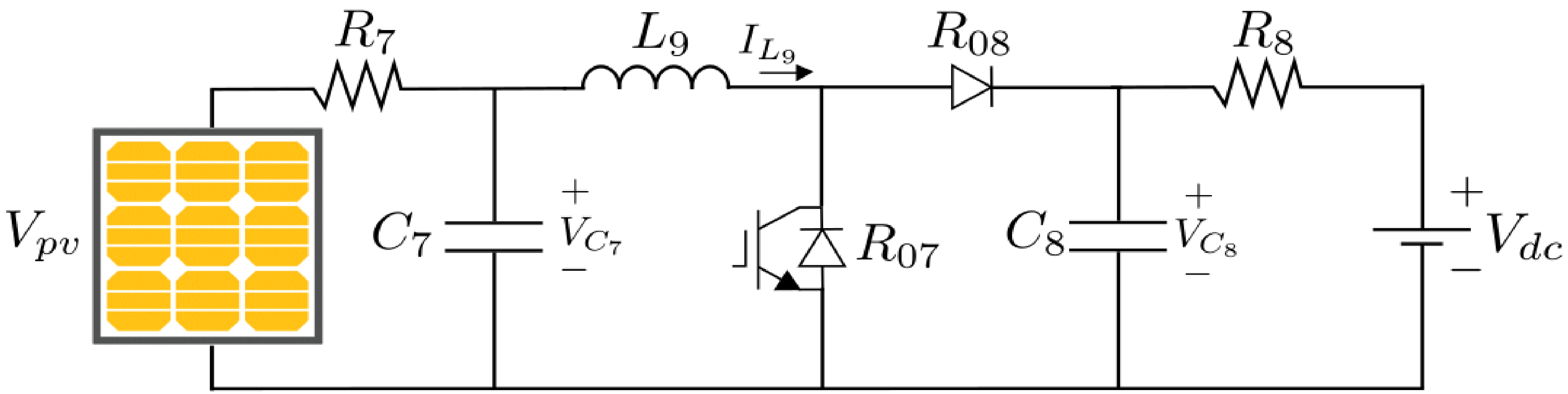

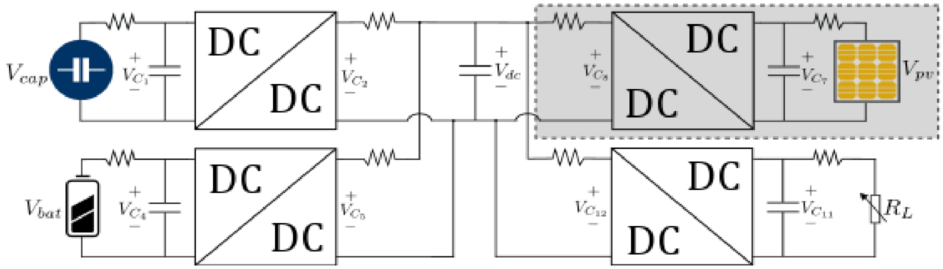

$$\begin{cases} \dot{V}_{C_7} = \dfrac{1}{R_7 C_7}(V_{pv} - V_{C_7}) - \dfrac{1}{C_7} I_{L_9} \\ \dot{V}_{C_8} = \dfrac{1}{R_8 C_8}(V_{dc} - V_{C_8}) + \dfrac{1}{C_5} I_{L_9}(1 - u_3) \\ \dot{I}_{L_9} = \dfrac{1}{L_9} V_{C_7} - \dfrac{1}{L_9} V_{C_8}(1 - u_3) - R_{08} I_{L_9} + \dfrac{R_{08} - R_{07}}{L_9} I_{L_9} u_3 \end{cases}$$

# Load System

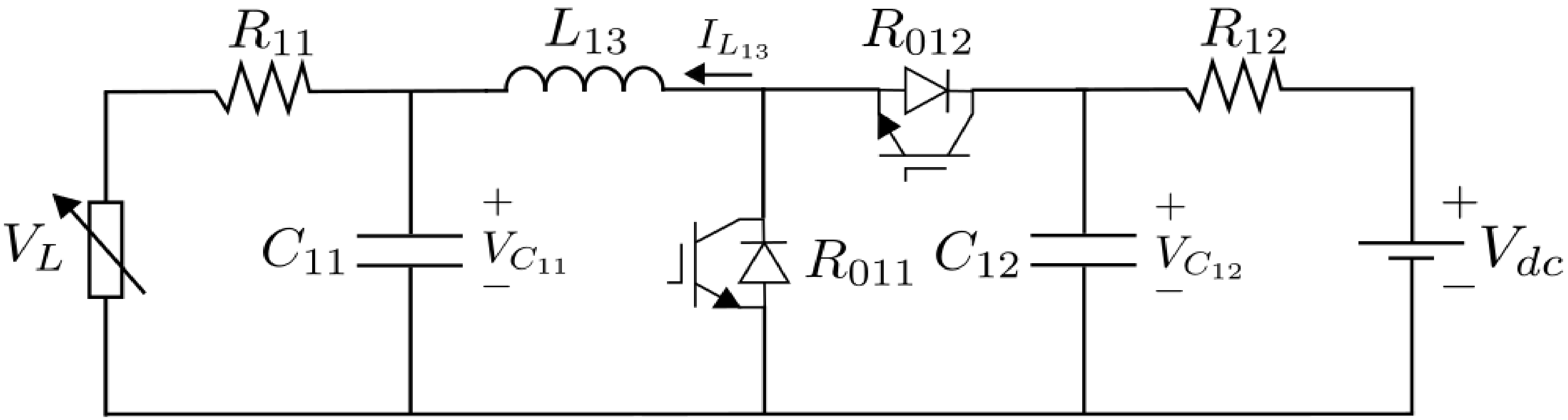

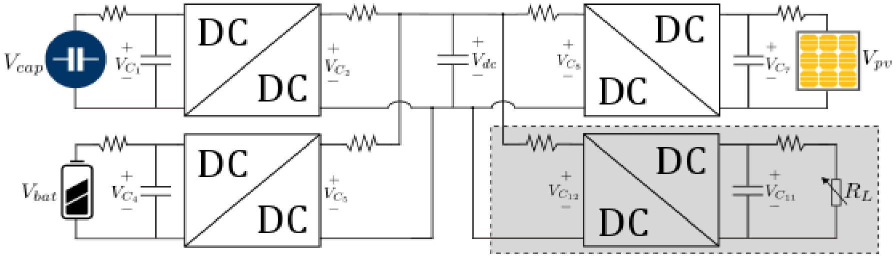

$$
\begin{cases}
\dot{V}_{C_{11}} = \dfrac{1}{R_{11}C_{11}}(V_L - V_{C_{11}}) - \dfrac{1}{C_{11}} I_{L_{13}} \\
\dot{V}_{C_{12}} = \dfrac{1}{R_{12}C_{12}}(V_{dc} - V_{C_{12}}) + \dfrac{1}{C_{12}} I_{L_{13}}(1 - u_4) \\
\dot{I}_{L_{13}} = \dfrac{1}{L_{13}} V_{C_{11}} - \dfrac{1}{L_{13}} V_{C_{12}}(1 - u_4) - \dfrac{R_{012}}{L_{13}} I_{L_{13}} + \dfrac{R_{012} - R_{011}}{L_{13}} I_{L_{13}} u_4
\end{cases}
$$

# Simulation Results

Simulation was developed on Matlab/Simulink using *SimPowerSystems* toolbox.

- Supercapacitor: Nominal voltage 400 *V* with 100 *F* of capacitance;
- Battery: lithium-ion, nominal voltage 380 *V* with 150 *kWh* of capacity;
- PV: 200 parallel cells and 15 series cells with 180*kWp* of capacity;
- DC load: 100 *kW* of maximum consumption;
- Train: nominal voltage 750 *V* with 0.5 *MW* produced during regenerative braking;

The inputs of the simulation are the solar irradiation and load consumption:

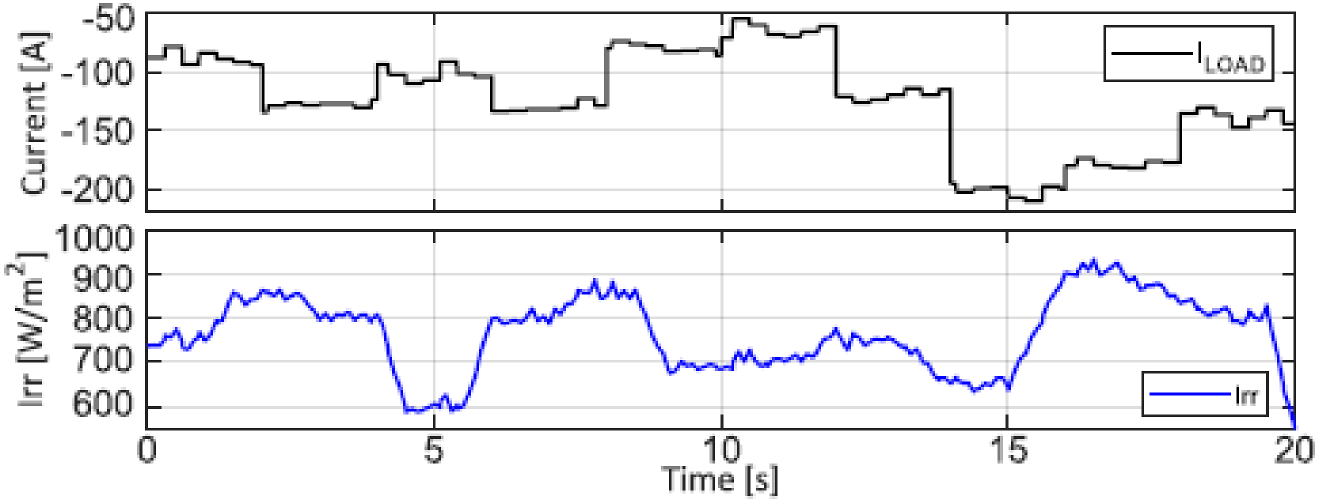

# Simulation Results

Voltages on the supercapacitor, battery, PV and train respectively:

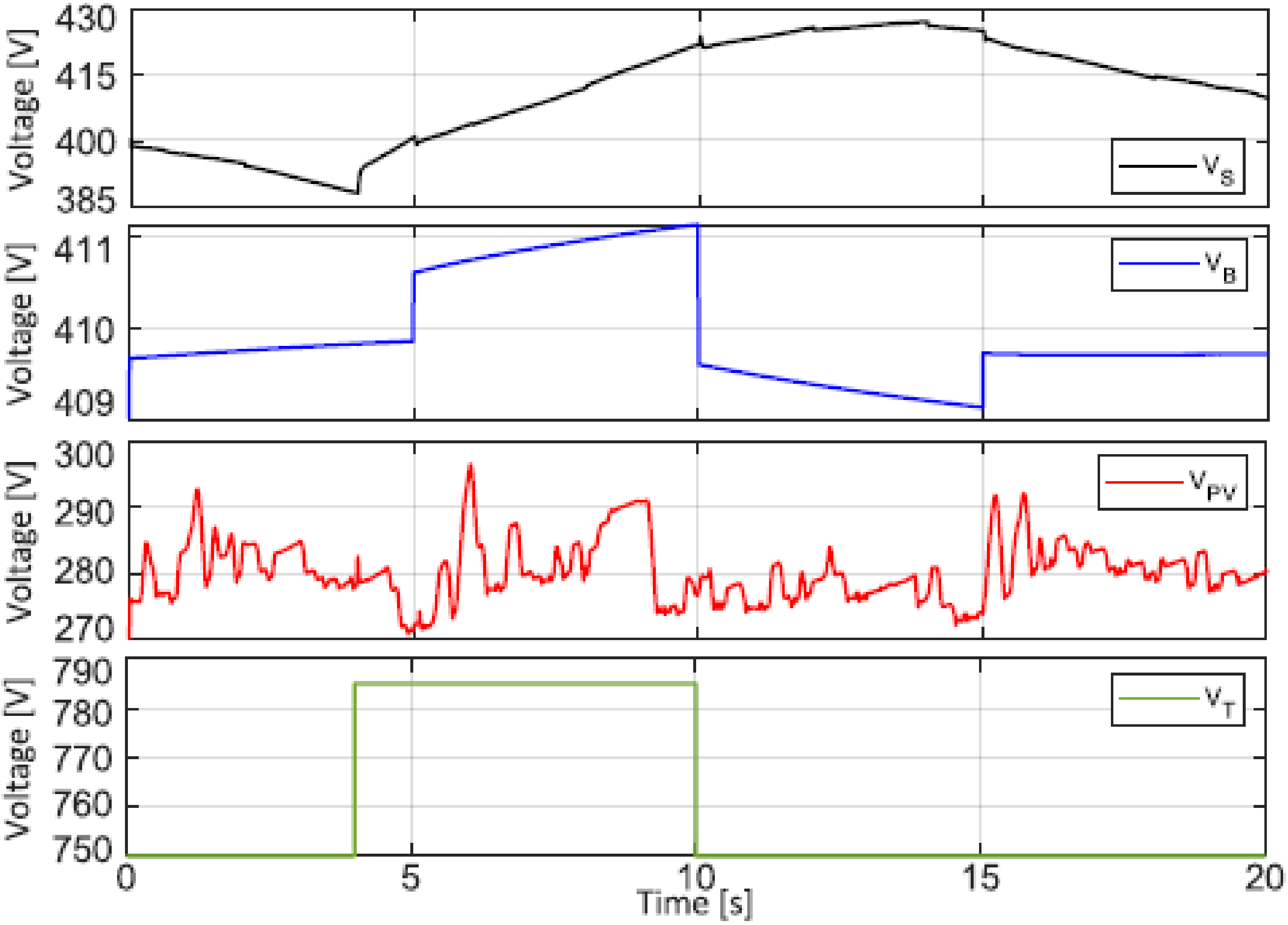

# Simulation Results

Controlled voltages ($V_{C_2}$ - Supercapacitor; $V_{C_{11}}$ - DC Load; $V_{C_{14}}$ - Train):

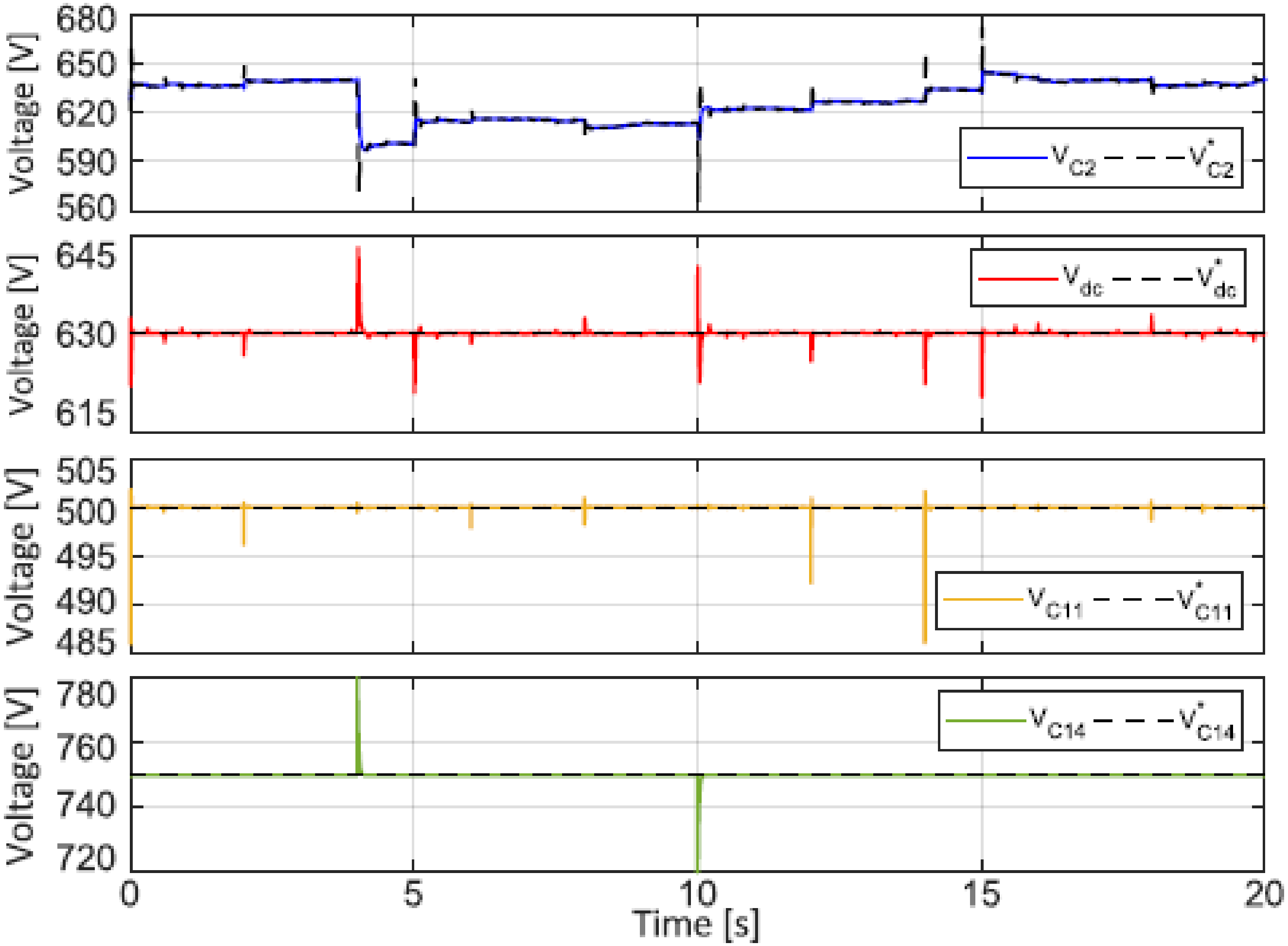

# Modélisation, conception & test des architectures micro grid

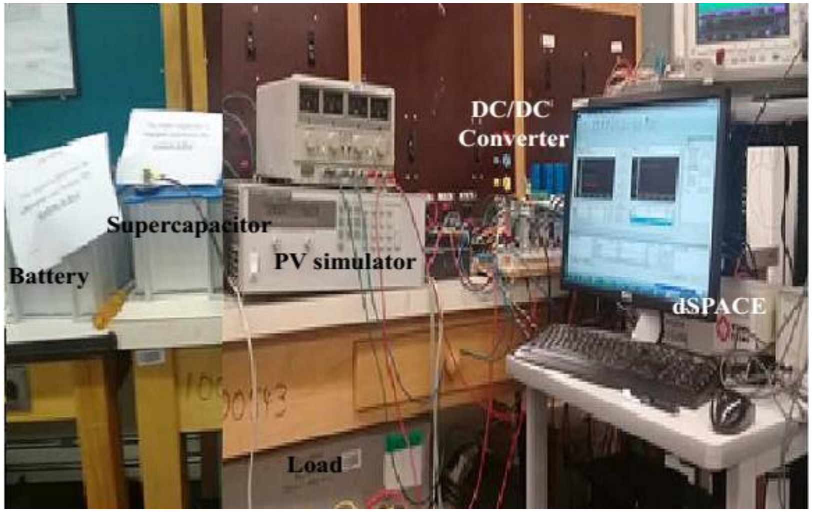

UNIVERSITÉ Concordia UNIVERSITY

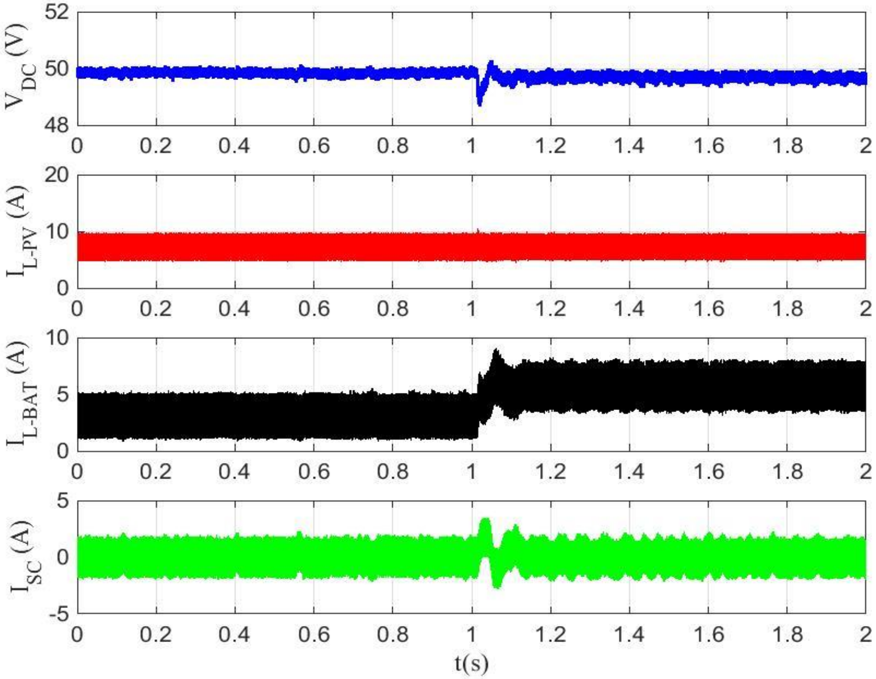

# SENSE-CITY Testbed
# Automatic Integration of a MicroGrid

- ✓ Temperature controlled in the buildings
- ✓ Heat may be obtained by heat-pumps and electric heaters
- ✓ Weather forecast may be disturbed by artificial weather
- ✓ Local water management may be included

# SENSE-CITY Testbed
# Automatic Integration of a MicroGrid

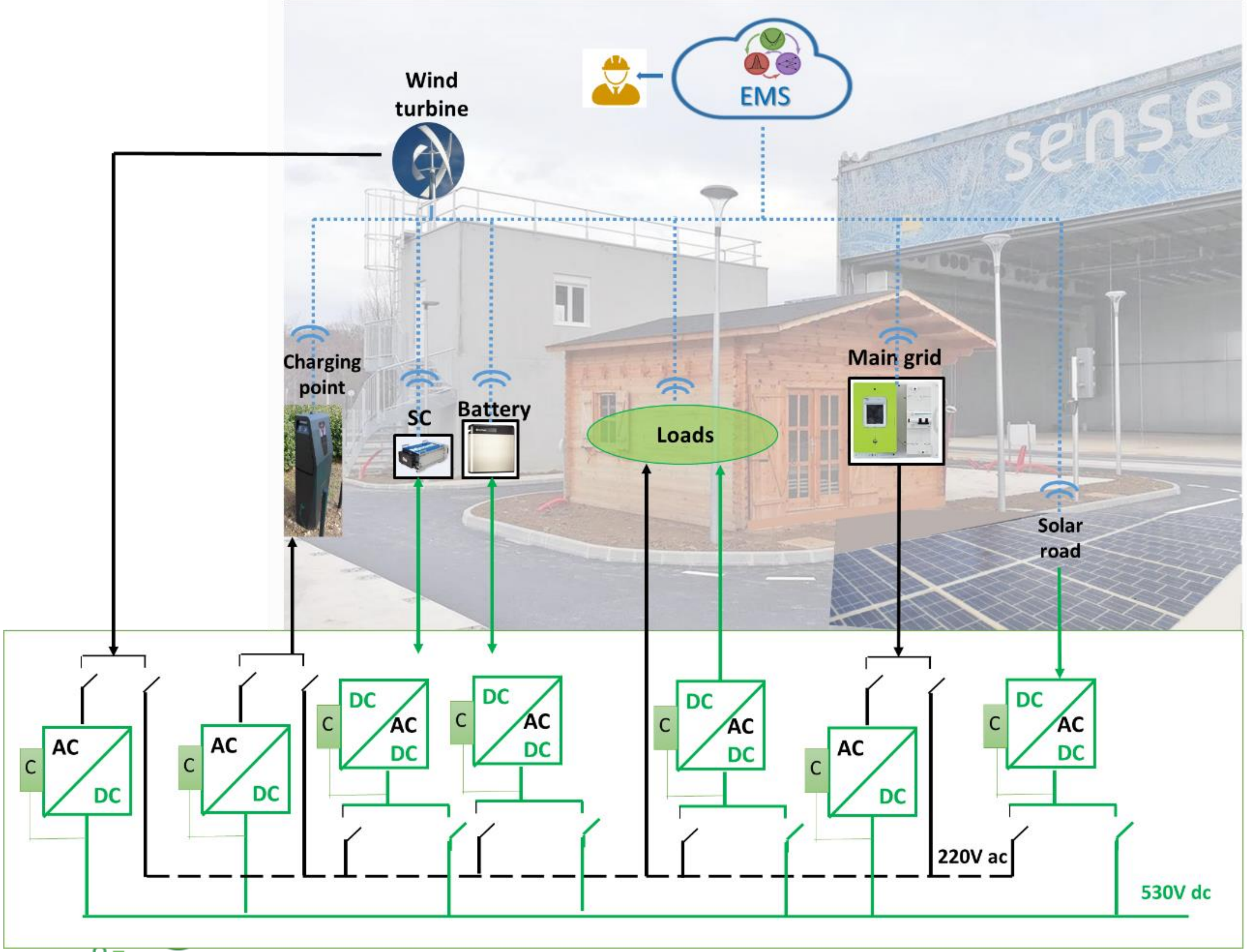

# Synchronverter

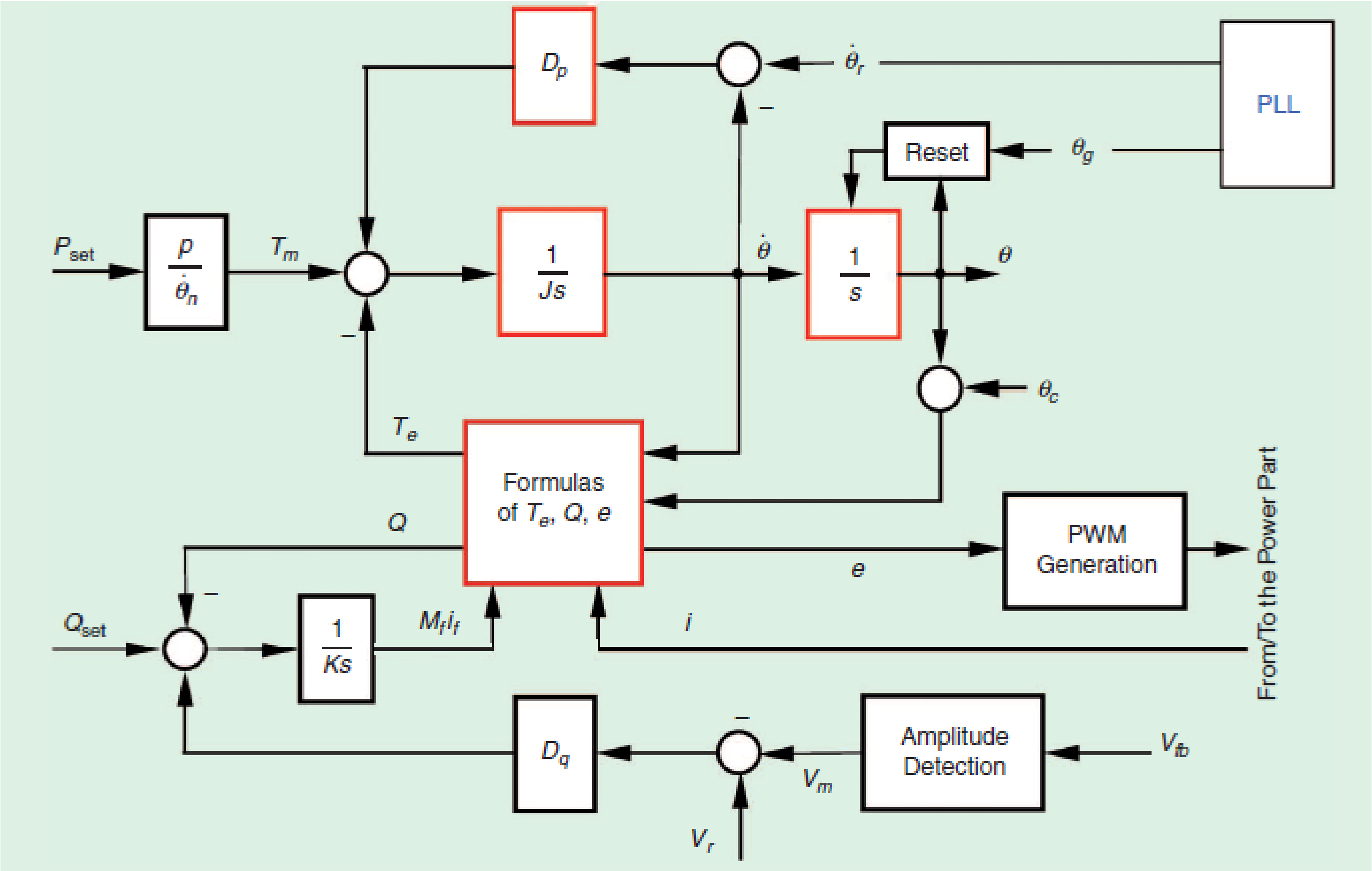

$$T_e = M_f i_f [i_a sin(\theta) + i_b sin(\theta - \frac{2\pi}{3}) + i_c sin(\theta + \frac{2\pi}{3})]$$

$$Q = -\omega M_f i_f [i_a cos(\theta) + i_b cos(\theta - \frac{2\pi}{3}) + i_c cos(\theta + \frac{2\pi}{3})]$$

$$e = \omega M_f i_f \begin{bmatrix} sin(\theta) \\ sin(\theta - \frac{2\pi}{3}) \\ sin(\theta + \frac{2\pi}{3}) \end{bmatrix}$$

# Future : Mult-energy vector

**Systems integrating different energies, aiming to optimize power, energy, $C0_2$ …**

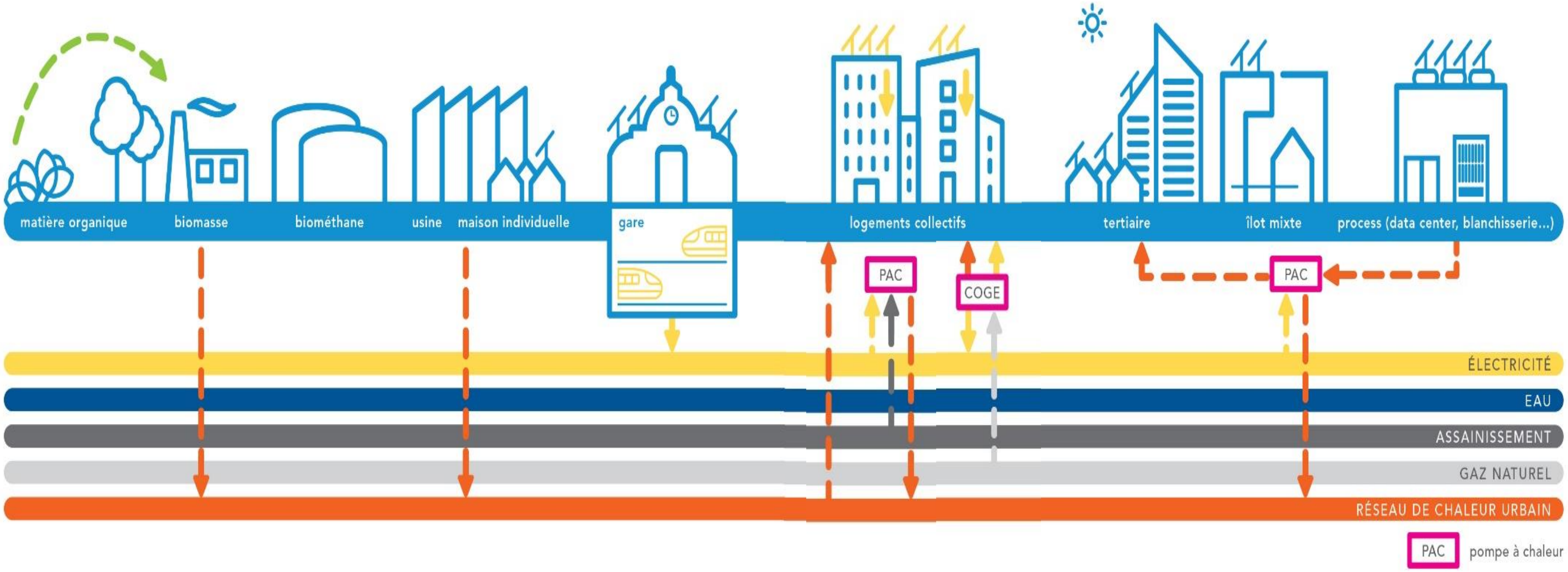

# Future – Multi-Energy Vector

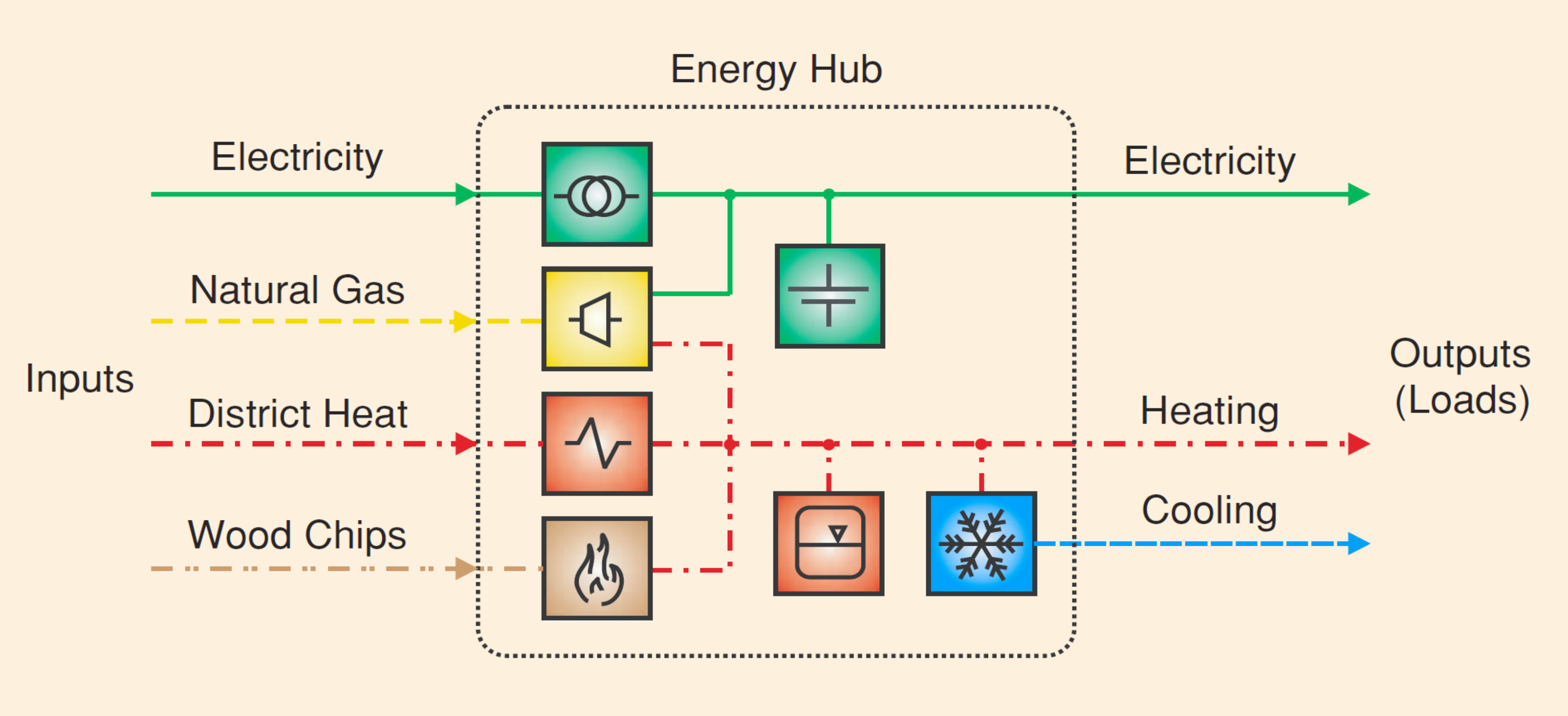

Often one can transform one kind of energy to the others

- ✓ Gas-to-power
- ✓ Power-to-gas
- ✓ Gas/electricity-to-heat

Goal becomes a better use of different energies to attain same objectives

# Future – Multi-Energy Vector

Techniques used on electric grids may be extended to other networks

- ✓ Control of district heat network with distributed heat sources
- ✓ Control of distributed heat-pumps
- ✓ Water and sewers management

Networks may be used in parallel to attain objectives (in particular temperature) in buildings or neighborhoods

Heat models of buildings and neighborhoods bring important inertia for electric grids helping the new problems caused by renewables → Absorb energy is also a problem!!!

Need of strong interactions with other energy communities, in particular mathematical thermic modelling, optimization, district heat networks…

SuperGrid
Institute

**Applied Research Institute**
**Funded half by French government and half by companies**

GE

ALSTOM

EDF

Nexans

# *Students Research Team for these results*

Guacira Costa

Juan Gonzalez

Janailson Lima

# *High Voltage*

Courtesy: Alstom

# Large Scale Renewables Integration through Multi-Terminal High Voltage Direct Current (MT-HVDC) network

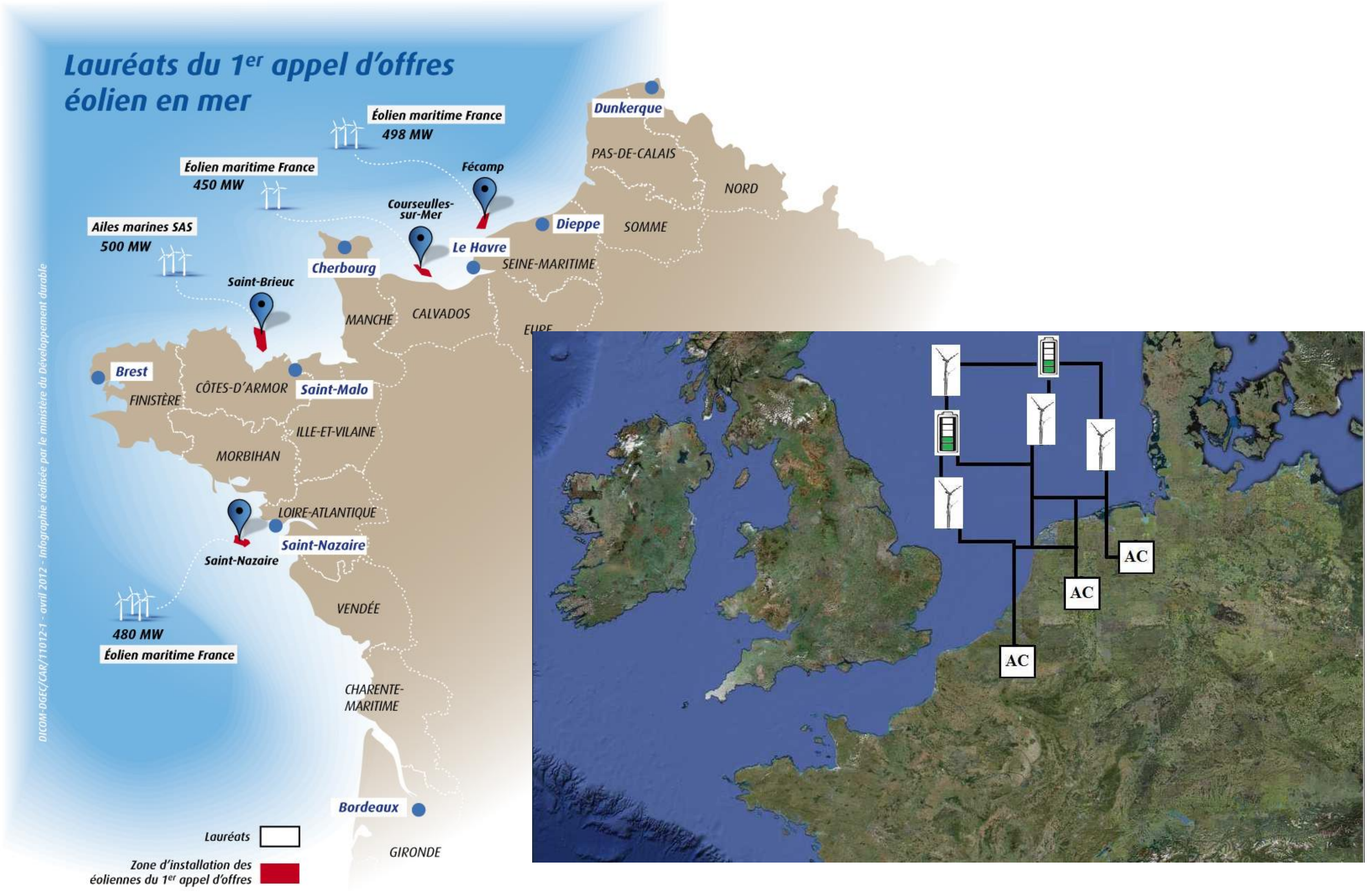


© Gunnar Britse
DC
AC
$P_{DC}$
V
AC
DC
AC
DC
AC
$P_{DC}$
V
AC
DC
AC
$P_{DC}$
V
$P_{DC}$
V
D
DC
BORWIN ALPHA

# *Storage*

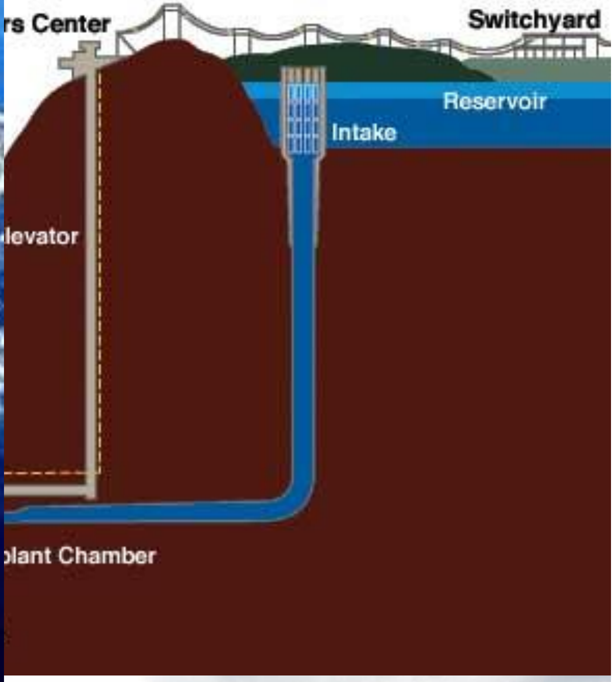
rs Center
Switchyard
Reservoir
Intake
levator
lant Chamber

# *Future Ancillary Services for Frequency Stability*

Consequences of Decreasing Inertia in Power System Requirements – an UK Case Study

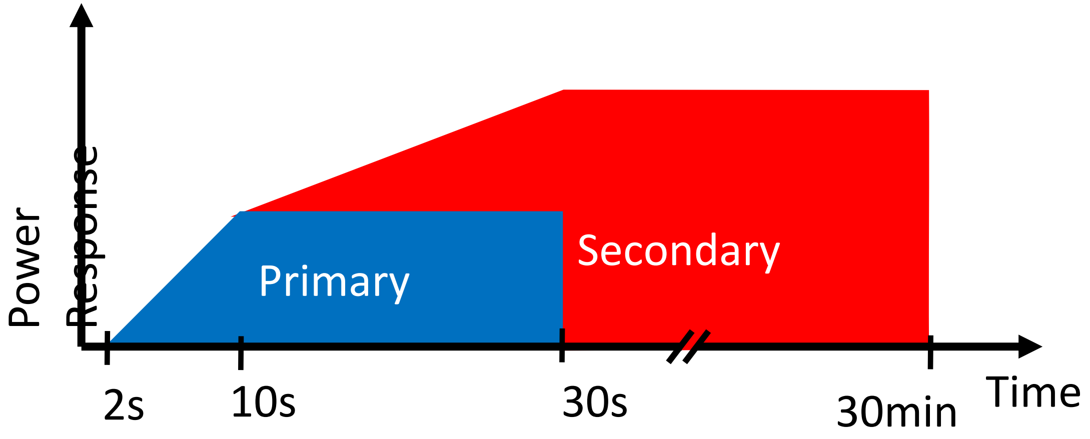

- Classic Power Response Requirements
  - Divided action through different time-scales
  - Mainly provided by mechanical prime-movers
  - Price of primary in 2017
    - 7.14 £/MW/h

# *Future Ancillary Services for Frequency Stability*

Consequences of Decreasing Inertia in Power System Requirements – an UK Case Study

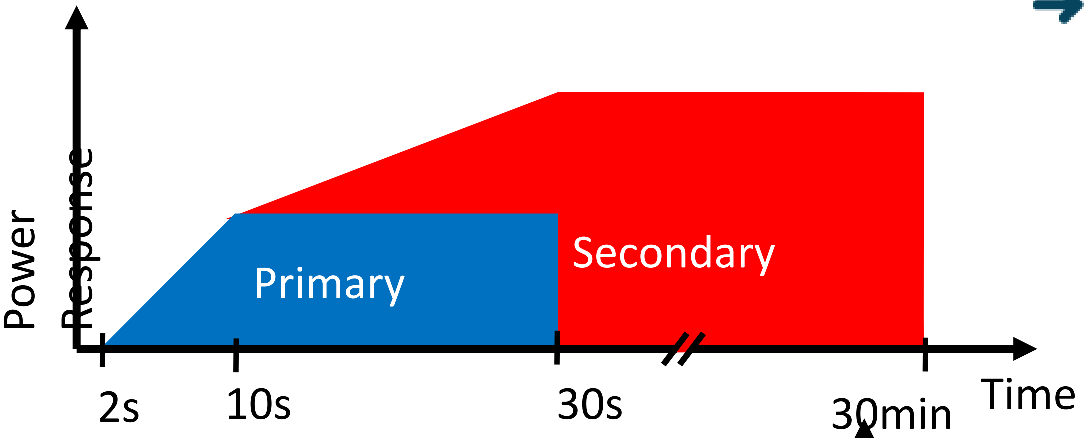

➜ **“New” Power Response Requirements (2018)**

- **Faster (sub second) power response**
- **Sustained for a long duration**
- **Highest price of EFR**
  - 11.97 £/MW/h

➜ Classic Power Response Requirements

- Divided action through different time-scales
- Mainly provided by mechanical prime-movers
- Price of primary in 2017
  - 7.14 £/MW/h

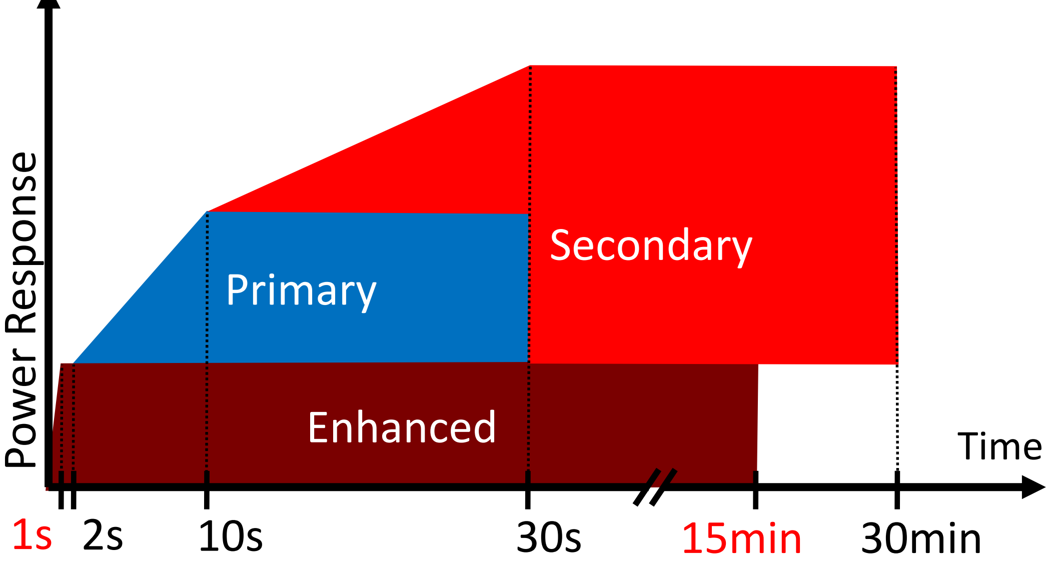

# Conclusions - SmartGrids need team work